常用HSS 及HSS-Co材料的毛坯成本(注意：非医疗所用，只供参考)

（在中国大陆采购的品质有绝对保障的原材料毛坯供参考）原材料毛坯单价为RMB元/kg,（部分材料材种说明见附件）。如原材料需经过锻打以达到更理想的晶粒致密性及刃口长时间的耐磨锋利性，原材料毛坯锻打体积余量至少为实际的2倍，即：原材料πR2*厚度*密度*2倍*单价，为原材料毛坯经锻打后的实际用料成本。(供参考不同等级材料的成本)

①. ASP60A （LZQ常备 AA级材料）
（相应HSS-Co10.5，处理硬度HRC70° ±2° ）特高硬度，高红硬性，密度约8.30g/ Cm3.
原材料毛坯 单价：432-480元/kg,真空热处理单价：75-90元/kg。

②. SKH59C （A级材料）
（相应HSS-Co8.0，处理硬度HRC68.5° ±2° ）高硬度，高红硬性，密度约8.20g/ Cm3,
原材料毛坯单价 ：320-350元/kg，真空热处理单价，60-75元/kg。

③. SKH57C （LZQ常备 A级材料）
（处理硬度HRC67° ±2° 优良的硬度和红硬性），密度约8.20g/ Cm3,
原材料毛坯单价 ：200-250元/kg，真空热处理单价，30-45元/kg。

④. SKH55C （LZQ常备 A级材料）
（处理硬度HRC65° ±2° 优良的硬度和红硬性），密度约8.10g/ Cm3,
原材料毛坯单价 ：180-220元/kg，真空热处理单价，20-30元/kg。

⑤. SKH51C （B级材料）
（处理硬度HRC61° ±2° 一般的硬度和红硬性，但抗冲击、崩刃、折断性能较好），
密度约7.95g/ Cm3,原材料毛坯单价 ：100-120元/kg，真空热处理单价，10-15元/kg。

⑥. HSS-6542 （C级材料）
（处理硬度HRC61° ±2° 一般的硬度和红硬性，但抗冲击、崩刃、折断性能较好），
密度7.95g/ Cm3,原材料毛坯单价 ：70-80元/kg，真空热处理单价，6-10元/kg。

⑦. HSS-9341（C级材料）
（处理硬度HRC61° ±2° 一般的硬度和红硬性但抗冲击、崩刃、折断性能较好），
密度8.0g/ Cm3,原材料毛坯单价 ：65-75元/kg，真空热处理单价，5-8元/kg。

⑧. HSS-4341（D级材料）
（处理硬度HRC60° ±2° 普通的硬度和耐磨性但抗冲击、崩刃、折断性能优良），
密度7.90g/ Cm3,原材料毛坯单价 ：55-65元/kg，真空热处理单价，3-6元/kg。

⑨. HSS-4241（D级材料）
（处理硬度HRC59° ±2° 普通的硬度和耐磨性，但抗冲击、崩刃、折断性能优秀），
密度7.90g/ Cm3,原材料毛坯单价 ：45-55元/kg，真空热处理单价，3-5元/kg。

⑩. HSS-607 （D级材料）
（处理硬度HRC58° ±2° 较差的硬度和耐磨性，但抗冲击、崩刃、折断性能特别优秀），
密度7.85g/ Cm3,原材料毛坯单价 ：35-45元/kg，真空热处理单价，2-4元/kg。

ASP60A： （超高耐磨型）
进口超高耐磨型高级高钴粉末钢，
淬硬处理：HRC70° ±2° ，具有极为优秀的耐磨耗性能及抗冲击性能，相应HSSE、HSS-AL及HSSCo，
具有 4~8倍之使用寿命，并可保证被加工产品的统一性及合格率。
常用于普通设备加工各类高温合金、耐热合金、镍钒钛合金铸铁、不锈钢等难加工材料
（含镍、Cr、Mo、硅、钛等）热处理前的特优秀加工工具。高温加工及综合性能极好，
允许切削速度较高，加工材料的硬度越高，效果越显著。
由于韧性略差，不适合于断续切削或在工艺系统刚性不足的条件下使用，否则易打刀或崩刃。

ASP60A: （超高耐磨耗型）
Co粉末鋼材、熱処理で硬化加工してある。HRC70° ±20° 耐摩擦、耐衝撃。
HSSE、HSS-AL、HSSCoより4-8倍の使用寿命がある。高温アロイ、耐熱アロイ、NiVTiアロイの
銑鉄、 SUSステーンレス（Ni、Cr、Mo、Si、Ti などの成分を含む場合）などの加工によく
採用される。高温加工、総合性能は優れる。ハイスピード切削OK。ワークの硬度が高いほど、
効 果が顕著。靭性が足らないため、断続切削と加工設備の精度が低い場合、
刃こぼれることがある。

SKH59C: （ 超耐磨型）
进口超耐磨高级高钴粉末钢：
淬硬处理：HRC68.5° ±2° ，具有极为优秀的耐磨耗性能及抗冲击性能，
相应HSSE、HSS-AL及HSSCo，具有4~6倍之耐用寿命，并可保证被加工产品的统一性及合格率。
常用于普通设备加工各类高温合金、耐热合金、镍钒钛合金铸铁、不锈钢等难加工材料
（含镍、Cr、Mo、硅、钛等）热处理前的特优秀加工工具。高温加工及综合性能极好，
允许切削速度较高，加工材料的硬度越高，效果越显著。 由于韧性略差，
不适合于断续切削或在工艺系统刚性不足的条件下使用，否则易打刀或崩刃。

SKH57C: （超硬型）
超硬高级高钴粉末钢：
淬硬处理HRC67° ±2° （HRA83.3° ~85.6° ）相应HSS具有2~4倍以上之使用寿命。

SKH55C: （特硬型）
特硬高级高钴粉末钢:
淬硬处理HRC65° ±2° （HRA82° ~84° ）相应HSS 具有2~3倍以上之使用寿命。
相应ISO M35。

SKH51C ： （泛用超硬型）
超硬高级高速工具钢:
淬硬处理HRC61° ±2° 。具有理想的耐磨性/切削锋利性和使用寿命。

HSSE: （泛用超硬型）
超硬高级粉末高速工具钢:
淬硬处理HRC63° ±2° 。相应HSS具有更为理想的耐磨性和使用寿命。

The cost of general material HSS and HSS-Co(Note: Not for medical use and only for reference)

The margin of the material must be as twice as the practical material to use, if you need the material forged to be ideal crystal compactness, and long time wear-resistance of the edge and the sharpness. That is to say, the raw material *πR2*thickness*density*2 times*unit price, that equal to the actual cost of material to use after forging.

◆The cost of general HSS and HSS-Co material work piece

(The raw material blank purchased from Chinese Mainland which has absolute quality assurance for your reference,Please refer the attachment for the instructions of some materials and material types) please refer the attachment for some other instruction of the materials.

And the unit price of the raw material is RMB /kg. (For reference about the cost of different grades of material)

①. ASP60A (Grade AA)
(corresponding to the HSS-Co 10.5, the hardness can be up to HRC of 70° ±2° after treatment).
Ultra high hardness, and high red hardness, the density is approximately 8.30g/Cm3.
The unit prices of the raw material 430-480 RMB/kg, and the unit price of vacuum heat treatment Is 75-90 RMB/kg.

②. SKH59C:(Grade A.)
(corresponding with HSS-Co8.0, deal the hardness can be up to HRC 68.5° ±2°)after treatment. Ultra high hardness, and high Red hardness, the density is approximately 8.20g/ Cm3. The unit price of the raw material is 320-350RMB/kg, and the unit price of vacuum heat treatment is 60-75 RMB/kg.

③. SKH57C :(which LZQ has in stock for year round)
(deal the hardness can be up to HRC67° ±2° after treatment),with excellent hardness and high red hardness .the density isapproximately 8.20 g/ Cm3. The unit price of raw material is 200-250RMB/kg, and the unit price of Vacuum heat treatment is 30-45 RMB/kg.

④. SKH55C: (which LZQ has in stock for year round),
its material with A grade, with excellent hardness and high red hardness, the density is approximately 8.10g/ Cm3. The unit price of raw material is 180-220RMB/kg, and the unit price of vacuum heat treatment is 20-30 RMB/kg.

⑤. SKH51C:(Grade B)
(the hardness can be up to HRC61° ±2° after treatment) with general hardness and high red hardness, but with comparably high impact-resistance, tipping-resistance, and fracture-resistance.
The density isapproximately 7.95g/ Cm3, the unit price of raw material is 100-120RMB/kg, and the unit price of vacuum heat treatment is 10-15RMB/kg.

⑥. HSS-6542:(Grade C)
(the hardness can be up to HRC61° ±2° after treatment) with general hardness and high red hardness , but with highimpact-resistance, tipping-resistance, and fracture-resistance. The density is approximately7.95g/ Cm3, the unit price of raw material is 70-80RMB/kg, and the unit price of vacuum heattreatment is 6-10RMB/kg.

⑦. HSS-9341:(Grade C)
(the hardness can be up to HRC61° ±2° after treatment) with general hardness and high red hardness, but with comparable high impact-resistance, tipping-resistance, and fracture-resistance.
The density is approximately 8.0g/ Cm3, the unit price of raw material is 65-75RMB/kg, and the unit price of vacuum heat treatment is 5-8RMB/kg.

⑧. HSS-4341:(Grade D)
(the hardness can be up to HRC60° ±2° after treatment) with general hardness and wear-resistance, but with high impact-resistance, tipping-resistance, and fracture-resistance.
The density is approximately7.90g/ Cm3, the unit price of raw material is 55-65RMB/kg, and the unit price of vacuum heat treatment is 3-6RMB/kg.

⑨. HSS-4241:(Grade D)
(the hardness can be up to HRC59° ±2° after treatment) with general hardness and wear-resistance, but with excellent impact-resistance, tipping-resistance, and fracture-resistance.
The density is approximately7.90g/ Cm3, the unit price of raw material is 45-55RMB/kg, and the unit price of vacuum heat treatment is 3-5RMB/kg.

⑩. HSS-607:(Grade D)
(the hardness can be up to HRC58° ±2° after treatment) with comparably weak hardness and wear-resistance,
but with especially excellent impact-resistance, tipping-resistance, and fracture-resistance.
The density is approximately7.85g/ Cm3, the unit price of raw material is 35-45RMB/kg, and the unit price of vacuum heat treatment is 2-4RMB/kg.

ASP60A:
Imported ultra high wear-resistant high-grade high cobalt powder steel: quenched: HRC70 2 , with excellent wear resistance and impact resistance. Comparing with HSSE\HSS-AL and HSSCo, it has 4~8 times lifetime, and can guarantee uniformity and conformity rate of machined products. It is often applied in general equipment for machining various materials including Ni\Cr\Mo\Si\Ti) that are hard to machine like high alloy\heat-resistant alloy\cast iron of nickel-vanadium-titanium alloy\stainless steel. It is excellent machining tool before heat treatment. It has excellent high temperature machining andcomprehensive performance, and allows higher cutting speed. The higher the hardness of machined materials are, the more remarkable the effect would be. Because its roughness is not so good, it is not suitable for discontinuous cutting or for using under processing system of insufficient rigidity, otherwise,
Cutter's hit or chip will happen.

SKH59C : (ultra high wear-resistance)
Imported super wear-resistance high grade high cobalt powder steel: hardening at HRC68.5° ±2° , with excellent wear-resistance and impact-resistance compare with the material of HSSE、HSS-AL or HSSCo, with more than 4-6 times serving lives, and we are sure of the uniformity and conformity rate of machined products. It is
often applied on ordinary equipment to machine various different machining materials (containing Ni, Cr, Mo, Si, Ti etc) like high temperature alloys, heat-resistant alloys, Ni-V-Ti alloys, cast iron, stainless steel etc. before heat treatment. It is machined with high temperature and comprehensive ability, and high cutting speed allowed, the performance would be better
if the hardness of the material to use is higher. Owing to the bad tenacity, and it's not suitable for using
under non-continuous cutting and the condition of worse steel feature, it would be easy to tipping,!

SKH57C: (ultra hard)
Specially hard & advanced high cobalt powder steel:
quench hardening at HRC67° ±2° (HRA83.3° -~85.6°), comparing to HSS, it has 2~4 times or more longer service life .

SKH55C: (Special Hardness)
Special hardness high Cobalt powder steel, Quench treatment HRC65° ±2° (HRA82° -84°), Moreover HSS have above 2-3time use life. Correspond to ISO M35A.

HSSE: (The widely using ultra hard type)
Super hard high quality powder steel tool steel, hardening at HRC63° ±2° degrees.
corresponding to HSS, it has even more ideal wear-resistant and service life

◆ 工具鋼關聯Concerning of tool steel 工具鋼関係

規格號碼・名稱 Spec. Name 規格番号、名称	JIS	AISI ASTM	BS	BIN VDEh	NF	Γ OCT
JIS G4401 炭素工具鋼材 Carbon tool steel 炭素工具鋼材	SK1	W1-13	-	-	Y2140	Y13
	SK2	W-11 1/2	BW1C	-	Y2120	Y12
	SK3	W1-10	BW1B	C105W1	Y1105	Y11
	SK4	W1-9	BW1A	-	Y190	Y10
	Sk5	W1-8	BW1A	C80W1	Y190・Y180	Y8Γ・Y9
	SK6	W1-7	-	C80W1	Y180・Y170	Y8
	SK7	-	-	C70W2	Y170	Y7
JIS G4403 高速工具鋼鋼材 High speed tool steel 高速度工具鋼の鋼材	SKH2	T1	BT1	-	Z80WCV・18-04-01	P18
	SKH3	T4	BT4	-	Z80WKCV・18-05-04-01	-
	SKH4	T5	BT5	S18-1-2-5	Z80WKCV・18-10-04-02	-
	SKH10	T15	BT15	-	Z160WKCV・12-05-05-04	-
	SKH51	M2	BM2	S6-5-2	Z85WDCV・06-05-04-02	-
	SKH62	M3-1	-	-	-	-
	SKH53	M3-2	-	S6-5-3	Z120WDCV・06-05-04-03	-
	SKH54	M4	BM4	-	Z130WDCV・06-05-04-04	-
	SKH55	-	-	S6-5-2-5	Z90WDKCV・06-05-05-04-02	P6M5K5
	SKH56	M36	-	-	-	-
	SKH57	-	-	S10-4-3-10	Z130WKCDV・10-10-04-04-03	-
	SKH58	M7	-	-	Z100DCWV・09-04-02-02	-
	SKH59	M42	BM42	S2-10-1-8	Z11DKCWV・09-08-04-02-01	-
	MPM					
JIS G4404 合金工具鋼鋼材 Alloy tool steel 合金工具鋼の鋼材	SKS11	F2	-	-	-	XB4
	SKS2	-	-	105WCr6	105WC13	-
	SKS21	-	-	-	-	-
	SKS5	-	-	-	-	-
	SKS51	L6	-	-	-	-
	SKS7	-	-	-	-	-
	SKS8	-	-	-	Y2140C	13X
	SKS4	-	-	-	-	-
	SKS41	-	-	-	-	-
	SKS43	W2-9 1/2	BW2	-	Y1105V	-
	SKS44	W2-8 1/2	-	-	-	-
	SKS3	-	-	-	-	9XBΓ
	SKS31	-	-	105WCr6	105WC13	XBΓ
	SKS93	-	-	-	-	-
	SKS94	-	-	-	-	-
	SKS95	-	-	-	-	-
	SKD1	D3	BD3	X210Cr12	Z200C12	X12
	SKD11	D2	BD2	-	Z160CDV12	-
	SKD12	A2	BA2	-	Z100CDV5	-
	SKD4	-	-	-	Z32WCV5	-
	SKD5	H21	BH21	-	Z30WCV9	-
	SKD6	H11	BH11	X38CrMoV51	Z38CDV5	4X5MφC
	SKD61	H13	BH13	X40CrMoV51	Z40CDV5	4X5Mφ1C
	SKD62	H12	BH12	-	Z35CWDV5	3X3M3φ
	SKD7	H10	BH10	X3ZCrMoV33	32DCV28	-
	SKD8	H19	BH19	-	-	-
	SKT3	-	-	-	55CNDV4	-
	SKT4	-	-	55NiCrMoV6	55NCDV7	5XHM

高速度鋼的特性位置安裝圖Sketch map of high speed steel characteristic 高速度鋼の特性位置付け図

材料標準規格的比較【Ⅲ】（特殊鋼、不銹鋼）
Comparison of standard specification of materials [III] (special steel, stainless steel)
材料規格の比べ[III]（特殊鋼、ステンレススチール）

◆特殊用途鋼關聯 Concerning special purposes steel（特殊用途関連）

規格號碼・名稱 Spec. Name 規格番号、名称	JIS	AISI SAE	BS	DIN	NF	OCT
High carbon chrome bearing steel JIS G4805 高炭素 鉻軸承 鋼鋼材 高炭素クロム 軸受鋼の鋼材	SUJ1	51100	–	–	–	–
	SUJ2	52100	535A99	100Cr6	100C6	ωX15
	SUJ3	ASTMA485 Grade-1	–	–	–	–
	SUJ4	–	–	–	–	–
	SUJ5	–	–	–	–	–

◆不銹鋼關聯 Concerning stainless steel（ステンレススチール関連）

規格號碼・名稱 Spec. name	JIS	ISO	AISI ASTM	BS	DIN	NF	Γ OHT
JIS G4304 熱作拉伸 不銹鋼板 Hot-working stretching stainless steel plate 熱間圧延ステンレススチール刃シート	SUS201	A-2	AIS1201	–	–	–	–
	SUS202	A-3	AIS1202	BS284S16	–	–	Γ OCT12X17 Γ 9AH4
	SUS301	14	AIS1301	BS301S21	DINX12CrNi177	NFZ12CN17.07	–
	SUS301J1	–	–	–	–	–	–
	SUS302	12	AIS1302	BS302S25	–	NFZ10CN18.09	–
	SUS302B	–	AIS1302B	–	DINX5CrNi1810	NFZ6CN18.09	–
	SUS304	11	AIS1304	BS304S31	DINX2CrNi1911	NFZ2CN18.10	Γ OCT08X18H10
	SUS304L	10	AIS1304L	BS304S11	–	NFZ5CN18.09Az	Γ OCT03X03H11
	SUS304N1	–	AIS1304N	–	DINX2CrNiN1810	NFZ2CN18.10Az	–
	SUS304N2	–	ASTMXM21	–	–	–	–
	SUS304LN	10N	ASTM304LN	–	DINX5CrNi1812	NFZ8CN18.12	–
	SUS305	13	AIS1305	BS305S19	–	NFZ10CN24.13	–
	SUS309S	–	AIS1309S	–	–	NFZ12CS25.20	–
	SUS310S	–	AIS1310S	BS310S31	DINX5MrNiMo17122	NFZ6CND17.11	–
	SUS316	20,20a	AIS1316	BS316S31	DINX2CrNiMo17132	NFZ2CND17.12	–
	SUS316L	19,19a	AIS1316L	BS316S11	–	–	Γ OCT03X17H14M2
	SUS316N	–	AIS1316N	–	DINX2CrNiMoN17122	–	–
	SUS316LN	19N,19aN	ASTM316LN	–	–	NFZ2CND17.12Az	–
	SUS316J1	–	–	–	–	–	–
	SUS316J1L	–	–	–	–	–	–
	SUS317	–	AIS1317	BS317S16	DINX2CrNiMo18164	–	–
	SUS317L	24	AIS1317L	BS317S12	–	NFC2CND19.15	–
	SUS317J1	–	–	–	DINX6CrNiTi1810	–	–
	SUS321	15	AIS1321	BS321S31	DINX6CrNiNb1810	NFZ6CNT18.10	–
	SUS347	16	AIS1347	BS347S31	–	NFZ6CNNb18.10	Γ OCT08X18H10T
	SUSXM15J1	–	ASTMXM15	–	–	NFZ15CNS20.12	Γ OCT08X18H12B
	SUS329J1	–	AIS1329	–	–	–	–
	SUS329J2L	–	ASTM	–	–	–	–
	SUS405	2	AIS1405	BS405S17	DINX6CrAl13	NFZ6CA13	–
	SUS410L	–	–	–	–	NFZ3C14	–
	SUS429	–	AIS1429	–	–	–	–
	SUS430	8	AIS1430	BS430S17	DINX6Cr17	NFZ8C17	–
	SUS430LX	–	ASTMXM8	–	DINX6CrTi17	NFZ8CT17	Γ OCT12X17
	SUS434	9c	AIS1434	BS434S17	DINX6CrNb17	NFZ8CNb17	–
	SUS436L	–	–	–	–	NFZ8CD17.01	–
	SUS444	F1	ASTM	–	–	–	–
	SUS447J1	–	–	–	–	–	–
	SUSXM27	–	ASTMXM27	–	–	NFZ01CD26.1	–
	SUS403	–	AIS1403	–	–	–	–
	SUS410	3	AIS1410	BS410S21	–	–	–
	SUS410S	1	ASTM410S	BS403S17	DINX10Cr13	NFZ13C13	Γ OCT12X13
	SUS420J1	4	AIS1420	BS420S29	DINX6Cr13	NFZ6C13	Γ OCT08X13
	SUS420J2	–	–	BS420S37	DINX20Cr13	NFZ20C13	Γ OCT20X13
	SUS429J1	–	–	–	DINX30Cr13	NFZ30C13	Γ OCT30X13
	SUS440A	5	AIS1440A	–	–	–	–
	SUS631	2	ASTM631	–	DINX7CrNiAl177	NFZ8CNA17.7	Γ OCT09X17H71-0

Reference: 參考：
國際標準化機構ISO= International Organization for Standardization（国際規格化機構）
美國鋼鐵協會AISI=American Iron and steel Institute（アメリカ鋼鉄協会）
汽車技術協會SAE=Society of Automotive Engineers（自動車技術協会）
英國規格協會BS=British Standards Institution（イギリス規格協会）
美國材料規格協會ASTM=American Soclety for Testing and Materials（アメリカ材料規格協会）
德國規格委員會DIN=Deutsches Institut fur Normung（ドイツ規格委員会）
法國國家標準NF=Nomes Francaises（フランス国家規格NF）
蘇聯國家規格TOCT= Russia National Standards（フランス国家規格NF）
德國鋼鐵協會VDEh=Vereim Deutsher Fisenhuttenleute（ドイツ鋼鉄協会）

◆ 鑽石鎢鋼常用牌號(材種)對照表
Comparison table for general brand (material) of diamond tungsten steel ダイヤーモンド、タングステン鋼常用ブランド（材種）対照表

ISO Code		LZQ	VR WESSON	CERATIZIT	GREENLEAF	CARBEX EVAMET	YB	Wimet	Unit	Tykram	Carbex	ROCT (俄罗斯)	BHMA
P	P40	PRA121 PRA1220 PRA1200T	VR79	S40T GM246 S40T Gm740	GA-5040 G-50 G-915 G-910	CNX430 CS6	YT5	GW540 XL45	US40 US54B Us50	TS4 CS6	CS4 P50	TFK12R T5K12B	263 182
M	M10	HRF10 HRD10 NBR108	VR75	H210T CTC1110 CTC1115 GM213 U17T	G-23 GA-5022 GA-5026 G-925 G-920 G-20M	CYB300 CX1515 CX2515 TX10M CFX15	YW1		UA10 UH51B	TU1	CU10 RW2110		453
	M20	MR11 MR12 SRA81 SRA82 MR12T HUF10	VR52	CTW7120 CTP2120 SR226+ GM127 Gm240	GA-5035 G-60 G-10 G-20M	CX3615 TX20M MX250M CNX825 CNX725 CYC400	YW2		UA20 UH51B	TU2	CU20 RW2110		363
	M30	PR14 PR15 SRA63 PRA8 PRA11 MU11 PR40	RAMET1	GM40 GM43+ GM740 CTC1435	GA-5030 G-910 G-915 GA-5040 G-01M G-50	CYC3300 TX25M CNX350 CNX430			UA30	THX	CU30		263
	M40	PU40 PUA5		S40T GM246 S40T		CS6			UA40		CH10		273
K	K01	HRF10 HRD10 NRB10Z	VR52 VR82		G-40 G-20M	CYP320 CYB300 CYD500	YG3X		UH03	TH2 TH3	CS310 CH01	BK3M	930
	K10	SR10 SR10T MR11 MR12 KR121 HUF10	2A5	H210T AMZ SR216 H216T H10T CTC1110 CTC1115 SR17 H216T T15KU H216T TSM20 GM213 U17T	G-23 GA-5026 G-920 G-925 GA-5012 GA-5022 G-02 G-20M	CX1515 CYY320 CX2515 CH01 CH01D CFX15 CYW15	YG6A YD10	GW620H	UH10 UH51B	TH1	CH15 CS310 CS320	BK6M	741
	K20	MR12T PR14 KR141 PR15 KR301 PR40 MU11 PRA5 NRA6		CTW7120 CTP2120 SR226+ CTC1435	G-10 G-910 GA-5040	CYC600 CYC100 MX250M CH1	YG6	GW620H	UH20	TG1	G1 CS320	BK6	560
	K30	NRA62 SRA63 NRA71 KRA720 PRA8 PU40 PUA5	RAMET1	TSC30 TSM30		CYD300 CYC700	YG8 YG15	CM G	UH30 UH40	TG1 TG3		BK8 BK10 BK15	280 290

◆ 超硬CBN/PCBN (Super hardness CBN/PCBN) (超硬CBN/PCBN)

分類 Classification 区分	代號 Symbol コード	LZQ	Mitsubishi Material	Sumitomo Eiectric	Toshiba Tungaloy	Kyocera	DIJET	Sandvik	GE	DeBeers
H	H01	CBN10	MBC010 MB810	BNX10 BNC150	BX310					
	H10	GE2000	MB8025 MB820	BN250 BNX20	BX330 BXC50	KBN10B	JBN330 JBN300	CB7020	HTC2000	DBC50
	H20	GE8200 CBN20	MB8025 MB825	BN25 BNC200	BX360	KBN25B	JBN245	CB7050	BZN8200	DBN45
	H30	CBN30	MB8025 MB835	BN300	BX380					
	S01		MB730	BN600 BN700	BX950					
S	S10									
	S20									
	S30	HUF10								
K	K01	GE6000	MB710	BN500	BX930	KBN65B	JBN795	CB7050	BZN6000	DBC80
	K10	CBN20	MB710 MB730	BN600 BN700	BX950	KBN900	JBN330			
	K20	CBN30	MB730	BN600 BN700						
	K30	HUF10		BNS800						

◆ 金屬陶瓷、陶瓷常用牌號（材種）對照表

Comparison table for general brand (material) of ceramet and ceramics 金属陶磁、陶磁常用ブランド（材種）対照表

ISO Code		LZQ	Mitsubishi Material	Toshiba Tungaloy	Sumitomo Eiectric	Kyocera	DIJET	Hitachi Tool	Sandvik	Kennametal	Widia	Iscar	Seco Tools
P	P01	HK4	NX22 XD805 AP25N	NS520 LX11 AT520 GT520	T05A T12Z NB90S T110A T2000Z	AZ5000 TN30 TC30 PV30	LN10 CX50 CA010 CA100	CH350	CT5015 CC620 CC650 CT5005	KT125 KW80 KB90 MC2 HTX	TTI-05 TTI-15 R,G,H	IC20N IC520M	
	P10	HK4	NX33 AP25N NX2525	N308 NS520 GT530 NS530 WG300 AT520 AT530	T12A T130Z T1200A WX120 T2000Z	TC30 TC40 TN60 TN6020 PV60 PV7020	LN10 CX50 NIT CX75	CH350 CZ25 CZ1025	CT525 CC670 CT5015 GC1525	KT125 KZ205 KT175 HT2 KB90X KT195M KT530M	TTI-05 TTI-15 TTI-25 R,G, M,U	IC20N IC520N IC530N IC30N	CM C15M
	P20		UP35N NX55 AP25N NX2525 NX335	N308 GT530 NS530 AT530	T1200A T130A T2000Z T3000Z	TN90 TN60 TC60 TN6020 PV90 PV7020 TN100M	CX50 NAT CX75 CX90	CH550 CH570 CZ25 CZ1025 CH7030	GC1525 CT530 CC670	KZ205 KT175 HT5 KT195M KT530M PS5 HT7 KT605M	TTI-15 TTI-25	IC20N IC75T IC30N IC520N	C15M CR CM
	P30	HUF10	NX99 NX4545 NX335 NX530 VP45N	NS530 NS540	T1200A CN8000 T250A T3000Z		CX90 SUZ CX99	CH570		KT195M HT7		IC75T IC30N	CR
M	M10	HK4	NX22 NX2525 AP25N	NS520 WG300 AT530 GT530	T05A T110A T12Z WX120 NX260C Y2000Z	TN60 TN6020 PV60 PV7020	LN10 CA200 CS100 CX50	CH350	CT525 CC670 CT5015 GC1525	KT125 KT175 KY4300 Y4000 KY2000	TTI-15 TTI-25 R,G, M,U	IC30N	CM C15M
	M20	HK4	NX33 NX2525 AP2525	NS520 GT530 NS530	T12A T1200A NS260C NS260 T2000Z	TN90 TN6020 PV90 PV7020 TN60 TN100M	CX50 NIT CX75 NAT CX90	CH550 CH570 CZ25 CZ1025 CH7030	CT530 CC670 GC1525	KT175 KT195M HT5 HT2 KY2100 KY2000 PS5	TTI-25 R,U N2000	IC30N	C15M CR
	M30	HUF10	NX4545		T130ZT250A T1200A CN8000 T3000Z		CX75 CX90 SUZ CX99	CH570	CT530 CC670	HT7 KZ205			C15M CR
K	K01	HK4	NX22 DX202 NX2525 AP25N	NS520 LX11 LX21 AT520 GT520	T05A T12Z T110A NB90S NB90M WX120 T2000A	SN60 A65 A66N TN30 PV30	LN10 CA100 CA200		CT515 GC1690 CC620 CC650 CT5015	KW80 KB90 MC2 HTX	R G H N1000		CR
	K10	HK4	NX33 XE515 XE9 AP25N NX2525	N302 GT530 WG300 FX105 NS520 AT530	T12A T1200A WX120 NS260C NS260 T2000Z	KS6000 TC30 TC40 PV30 PV60 PV6020 TN60 TN6020	LN10 CA200 CS100 CX75	CH350	CC650 CT5015 CT525	HT5 MC3 KB90 KY3000 KT315	R,G,H,U N1000 N2000		
	K20	HUF10	NX2525 AP25N		T3000Z		CX75						

◆ PCD鑽石材料(PCDdiamond material) (PCDダイヤモンド材料)

区分	代號 Symbol コード	LZQ	Mitsubishi Material	Sumitomo Eiectric	Toshiba Tungaloy	Kyocera	DIJET	Sandvik	GE	DeBeers
N	N01	GE1700	MD250	DA90	DX180	KPD025	JDA735		GE1700	CTH025
	N10	GE1500	MD205 MD220	DA150	DX160	KPD010	JDA745	CD10	GE1500	CTB010
	N20	GE1300	MD220 MD230	DA200	DX140 DX120	KPD002	JDA715 JDA710		GE1300	CTB002
	N30	GE1600	MD230	DA2200		KPD001			GE1600	

◆刀具模具常用材种参考
Reference for general material of tooling and mould.

LZQ常用材種參考 Reference of general material from LZQ	硬度Hardness		抗彎強度Bending strength		抗壓強度Compression strength		密度Density
	HV30	HRA	N/mm²	psi	N/mm²	psi	g/cm³
H10F	1600	92.1	3750	——	6300	——	14.50
H10F-1	1600	92.1	4300	623000	6250	906250	14.45
DK20	1500	91.4	2300	——	5300	——	14.70
DZ05	1900	93.8	2300	——	7700	——	15.00
DZ05	1900	93.8	2300	333000	6900	1000000	15.00
H3M	1750	93.0	1900	——	6900	——	15.20
H4M	1750	93.0	2000	290000	6900	1000000	1500
H5M	1700	92.7	2100	——	6700	——	15.00
H5M	1700	92.8	2100	305000	6700	971000	14.95
H6N	1575	91.9	2200	319000	6200	899000	14.95
H10N	1400	90.4	2600	——	5200	——	14.60
H12N	1300	89.3	2800	——	4600	——	14.30
DA25	1450	90.9	2400	348000	5200	754000	14.65
DC03	1900	93.8	2100	305000	7500	1088000	15.25
DZ05	1900	93.8	2300	333000	6900	1000000	15.00
H3F	1925	93.9	2200	319000	7800	1131000	15.25
H15F	1400	90.4	4000	580000	——	——	13.95
DH10	1720	92.9	2300	333000	——	——	15.00

◆G类钻石钨钢材种近似对照表
Approximate comparison table for material of diamond tungsten steel kind G.

國際標準化組織ISO	LZQ		德國 Germany			法國 France		日本 Japan		俄羅斯 Russia	瑞典 Sweden		英國 England			美國 America		
	LZQ	Diamond	DIN	Widia	Unit	Tykram	Carbex	Jls	Lgetalloy	ГОСТ	Sandvik Coromant	Seco	BHMA	Wimet	Annolloy	JIC	Wendt-Sonis	Kennametal
G05	NUA61 KU301Z	G6	–	GT05	G05 B10	–	G10	–	G10E	BK6	CS10 CS20	–	–	NH N	F1/F	–	–	–
G10	KUA720 KU301Z	G6	G1	GT10	G10	TG1	G12	E1	G2	BK6B	CS20	–	–	Xl2	F1/C	–	–	–
G15	PUA71	G8	–	GT15	G15 B30	TG2	E4	–	G3	BK8B	CG35 CS40	–	–	CT 90B	F2/8C	–	–	–
G20	PUA181	G11	G2	GT20 TH40	G20 G40	TG3	E5	E2	G5	BK10	CG40	–	–	G R11 110B	F2/10C	–	–	–
G30	VUA221Z	G15	G3	GT30	G30 B50	TG4	E6	E3	G6	BK15	CG60 CT50	–	–	BP1	F2/15C	–	–	–
G40	VUA324 VUA351	–	G4	GT40	G40	TG5	G40	E4	G7	BK20	–	–	–	–	F2/20C	–	–	–
G50	VUA421	–	G5	GT55	G50	TG6	G50	E5	G8	BK25	CT70 CT80	–	–	TT	F2/25C	–	–	–
G60	VUA521	–	G6	–	G60	–	–	–	–	BK30	–	–	–	–	F2/30C	–	–	–

超精研磨圓棒
Super finish grinding round bar
超精細研磨丸棒

（高耐磨/高耐衝擊/高精密度）
High wear-resistant/high impact-resistant /high precision
高耐摩耗/高耐衝撃用/高精密度

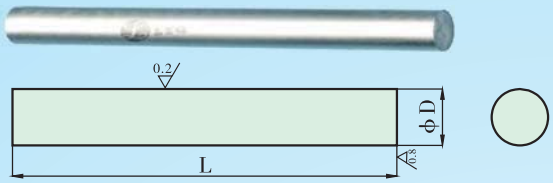

外徑公差：Outer diameter tolerance 外径公差

AAA級：	±0.001mm
AA級：	±0.002mm
A級：	+0 −0.004mm
B級：	+0 −0.008mm
C級：	±0.008mm

真圓度○≤0.004mm
Roundness真丸度
同心度 ◎≤0.004mm
Concentricity同心性
光洁度 0.4 ~ 0.1
Surface finish鏡細度

精棒直徑 Diameter Φ	L系列 Series シリーズ (mm)	材質Grades
0.010	14/	Quality Carbide
0.050		HXF10 ★
0.100	15/	HXD10(HRA94°)
0.200		
0.300	30/	NXB10Z ★
0.395		NXB10
0.400	38/	SX10
0.410		
0.450	39/	SX10T ★
0.495		
0.500	50/	MX11(HRA93°) ★
0.540		MX12 ★
0.600	50.5/	KX301
0.645		
0.650	51/	PX35
0.700	53/	H10F
0.720		
0.750	60/	PX40(HRA92°) ★
0.800		PXA5 ★
0.830	60.5/	NXA61 弱 強
0.900		KXA720
0.995	63/	
1.000	64/	PXA8 耐衝擊性 Impact resistant 耐摩耗性 Wear resistant
1.025		NXA920
1.027	65/	PXA11
1.070		
1.100	70/	PXA1220
1.150		
1.195	70.5/	S6 Strength 強 弱 Weakness
1.200		VXA201(HRC72°)
1.260	75/	VXA301
1.420	76/	VXA431
1.450		
1.500	77/	VXA441(HRC63°)
2.000		HSS-Co10.5
2.500	80/	
3.000		ASP60A(HRC69°) ★
3.170	82/	SKH59C
3.175		
3.500	90/	SKH57C(HRC65°)
3.970	100/	SKH55C ★
4.000		SKH51C ★
4.360	102/	
4.500		
4.760	110/	UNS S44003D(A) (HRC64° ±2°) ★
5.000		
5.500	120/	SKD11 ★
5.950	130/	SKD61 ★
6.000		
6.350	150/	ASTM440PH(AA) (HRC54° ±2°) ★
6.500		
7.000	312/	SUS630(17-4PH)
7.500		
8.000	335	SUS303
8.500		

精棒直徑 Diameter Φ	L系列 Series シリーズ (mm)	材質Grades
9.000	14/	Quality Carbide
9.500		HXF10 ★
9.525	15/	HXD10(HRA94°)
10.000		
10.500	30/	NXB10Z ★
11.000		NXB10
11.500	38/	SX10
12.000		
12.500	39/	SX10T ★
12.700		
13.000	50/	MX11(HRA93°) ★
13.500		MX12 ★
14.000	50.5/	KX301
14.500		
15.000	51/	PX35
15.500	53/	H10F
15.880	60/	PX40(HRA92°) ★
16.000		PXA5 ★
16.500	60.5/	NXA61 弱 強
17.000		KXA720
17.500	63/	
18.000	64/	PXA8 耐衝擊性 Impact resistant 耐摩耗性 Wear resistant
18.500		NXA920
19.000	65/	PXA11
19.500		
20.000	70/	PXA1220
20.500		
21.000	70.5/	S6 Strength 強 弱 Weakness
21.500		VXA201(HRC72°)
22.000	75/	VXA301
22.500		
23.000	76/	VXA431
23.500	77/	VXA441(HRC63°)
24.000		HSS-Co10.5
24.500	80/	
25.000		ASP60A(HRC69°) ★
25.500	82/	SKH59C
26.000		
26.500	90/	SKH57C(HRC65°)
27.000	100/	SKH55C ★
27.500		SKH51C ★
28.000	102/	
28.500		
29.000	110/	UNS S44003D(A) (HRC64° ±2°) ★
29.500		
30.000	120/	SKD11 ★
30.500	130/	SKD61 ★
31.000		
31.500	150/	ASTM440PH(AA) (HRC54° ±2°) ★
32.000	312/	SUS630(17-4PH)
32.500		
33.000	335	SUS303
33.500		

精棒直徑 Diameter Φ	L系列 Series シリーズ (mm)	材質Grades
34.000	14/	Quality Carbide
34.500		★ HXF10
35.000	15/	(HRA94°)HXD10
35.500		
36.000	30/	★ NXB10Z
36.500	38/	NXB10
37.000	39/	SX10
37.500		
38.000	50/	★ SX10T
38.500		
39.000	50.5/	★ (HRA93°)MX11
39.500	51/	★ MX12
40.000	53/	KX301
40.500	60/	PX35
41.000		
41.500	60.5/	H10F
42.000	63/	★ (HRA92°)PX40
42.500		★ PXA5
43.000	64/	Weakness Strength
43.500	65/	弱 強 NXA61
44.000	70/	KXA720
44.500		
45.000	70.5/	PXA8 耐衝擊性 Impact resistant 耐摩耗性 Wear resistant
45.500	75/	NXA920
46.000		PXA11
46.500	76/	
47.000	77/	PXA1220
47.500		S6
48.000	80/	強 弱 Weakness Strength (HRC72°)VXA201
48.500	82/	VXA301
49.000	90/	VXA431
49.500		
50.000	100/	(HRC63°)VXA441
51.000	102/	HSS-Co10.5
52.000	110/	★(HRC69°)ASP60A
53.000		
54.000	120/	SKH59C
55.000		(HRC65°)SKH57C
56.000	130/	★ SKH55C
57.000	150/	★ SKH51C
58.000	312/	
59.000		★ UNS S44003D(A) (HRC64° ±2°)
60.000	335	

Inch 規格Spec	
1/8Φ *3(Φ 3.175 *76.20)	★ SKD11
3/16Φ *3(Φ 4.76 *76.20)	★ SKD61
1/4Φ *4(Φ 6.35 *101.60)	★ ASTM440PH(AA) (HRC54° ±2°)
5/16Φ *4(Φ 7.94 *101.60)	
3/8Φ *4(Φ 9.525 *101.60)	SUS630(17-4PH)
7/16Φ *4(Φ 11.11 *101.60)	
1/2Φ *4(Φ 12.70 *101.60)	SUS303
5/8Φ *6(Φ 15.875 *152.40)	
3/4Φ *6(Φ 19.05 *157.80 2.40)	

★超精研磨圓棒可生產至小數點後第3～4位及0.001的遞增，外徑公差高可至±0.001mm。Super finish grinding round bar can be machined to the third or fourth digit & (0.001) after the decimal point, and outer diameter tolerance can be up to ±0.001mm.
超精細研磨丸棒は小数点後の3～4及（0.001）の増加まで、外径公差が±0.001mmまで生産可能。

★依圖依樣尺寸公差要求可生產特殊、復合、異型、超大超微細超長組合成型制品。We can produce special、compound、special-shaped、super-large/super-thin/super-long combined profiling products according to requirements of drawings, samples and dimension tolerance.
図面、サンプル及び寸法の公差要求により可生产特殊、複合、異型、超大、超微細、超長の組合せ成型製品を生産できる。

"★"表示在庫品 stock products

超精研磨帶孔圓棒（圓管、治具）

Super finish grinding round bar with hole(round pipe, fixture)

超精細研磨中空丸棒（丸管、治具）

（高耐磨/高耐衝擊/高精密度）

High wear-resistant/high impact-resistant/high precision

高耐摩耗/高耐衝擊用/高精密度

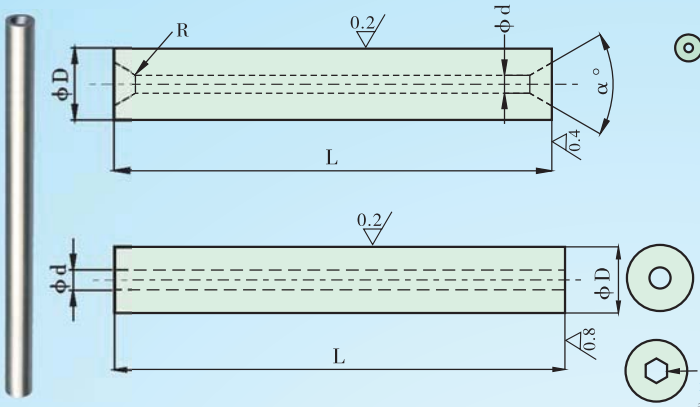

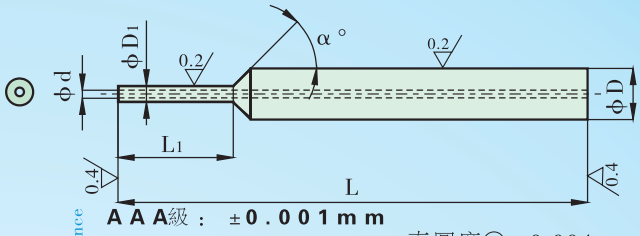

外徑公差：Outer diamter tolerance

AAA級：±0.001mm

AA級：±0.002mm

A級：+0 −0.004mm

B級：+0 −0.008mm

C級：±0.008mm

真圓度◯≤0.004mm

Roundness真丸度

同心度 ◎0.004mm

Concentricity同心性

光洁度 0.4 / 0.1

Surface finish鏡細度

多邊形內孔異型內孔 Abnormal inner hole with polygon 多角形内孔、異型内孔

規格 Specification 外徑φD*內徑φd*長度L O.D*I.D*Length	材 質Grades	規格 Specification 外徑φD*內徑φd*長度L O.D*I.D*Length	材 質Grades	規格 Specification 外徑φD*內徑φd*長度L O.D*I.D.*Length	材 質Grades
1.000*φd*L	Quality Carbide	19.500*φd*L	Quality Carbide	38.000*φd*L	Quality Carbide
1.500*φd*L	HXF10 ★	20.000*φd*L	HXF10 ★	38.500*φd*L	HXF10 ★
2.000*φd*L	HXD10(HRA94°)	20.500*φd*L	HXD10(HRA94°)	39.000*φd*L	HXD10(HRA94°)
2.500*φd*L	NXB10Z ★	21.000*φd*L	NXB10Z ★	39.500*φd*L	NXB10Z ★
3.000*φd*L	NXB10	21.500*φd*L	NXB10	40.000*φd*L	NXB10
3.500*φd*L	SX10	22.000*φd*L	SX10	40.500*φd*L	SX10
4.000*φd*L	SX10T ★	22.500*φd*L	SX10T ★	41.000*φd*L	SX10T ★
4.500*φd*L	MX11(HRA93°) ★	23.000*φd*L	MX11(HRA93°) ★	41.500*φd*L	MX11(HRA93°) ★
5.000*φd*L	MX12	23.500*φd*L	MX12	42.000*φd*L	MX12
5.500*φd*L	KX301 ★	24.000*φd*L	KX301 ★	42.500*φd*L	KX301 ★
6.000*φd*L	PX35	24.500*φd*L	PX35	43.000*φd*L	PX35
6.500*φd*L	H10F	25.000*φd*L	H10F	43.500*φd*L	H10F
7.000*φd*L	PX40(HRA92°) ★	25.500*φd*L	PX40(HRA92°) ★	44.000*φd*L	PX40(HRA92°) ★
7.500*φd*L	PXA5 ★ Weakness Strength	26.000*φd*L	PXA5 ★ Weakness Strength	44.500*φd*L	PXA5 ★ Weakness Strength
8.000*φd*L	NXA61	26.500*φd*L	NXA61	45.000*φd*L	NXA61
8.500*φd*L	KXA720	27.000*φd*L	KXA720	45.500*φd*L	KXA720
9.000*φd*L	PXA8	27.500*φd*L	PXA8	46.000*φd*L	PXA8
9.500*φd*L	NXA920	28.000*φd*L	NXA920	46.500*φd*L	NXA920
10.000*φd*L	PXA11	28.500*φd*L	PXA11	47.000*φd*L	PXA11
10.500*φd*L	PXA1220	29.000*φd*L	PXA1220	47.500*φd*L	PXA1220
11.000*φd*L	S6	29.500*φd*L	S6	48.000*φd*L	S6
11.500*φd*L	VXA201(HRC72°)	30.000*φd*L	VXA201(HRC72°)	48.500*φd*L	VXA201(HRC72°)
12.000*φd*L	VXA301	30.500*φd*L	VXA301	49.000*φd*L	VXA301
12.500*φd*L	VXA431	31.000*φd*L	VXA431	49.500*φd*L	VXA431
13.000*φd*L	VXA441(HRC63°)	31.500*φd*L	VXA441(HRC63°)	50.000*φd*L	VXA441(HRC63°)
13.500*φd*L	HSS-Co10.5	32.000*φd*L	HSS-Co10.5	50.500*φd*L	HSS-Co10.5
14.000*φd*L	ASP60A(HRC69°)	32.500*φd*L	ASP60A(HRC69°)	51.000*φd*L	ASP60A(HRC69°)
14.500*φd*L	SKH59C	33.000*φd*L	SKH59C	51.500*φd*L	SKH59C
15.000*φd*L	SKH57C(HRC65°)	33.500*φd*L	SKH57C(HRC65°)	52.000*φd*L	SKH57C(HRC65°)
15.500*φd*L	SKH55C ★	34.000*φd*L	SKH55C ★	53.000*φd*L	SKH55C ★
16.000*φd*L	SKH51C ★	34.500*φd*L	SKH51C ★	54.000*φd*L	SKH51C ★
16.500*φd*L	UNS S44003D(A) (HRC64° ±2°) ★	35.000*φd*L	UNS S44003D(A) (HRC64° ±2°) ★	55.000*φd*L	UNS S44003D(A) (HRC64° ±2°) ★
17.000*φd*L	SKD11	35.500*φd*L	SKD11	56.000*φd*L	SKD11
17.500*φd*L	SKD61	36.000*φd*L	SKD61	57.000*φd*L	SKD61
18.000*φd*L	ASTM440PH(AA) (HRC54° ±2°) ★	36.500*φd*L	ASTM440PH(AA) (HRC54° ±2°) ★	58.000*φd*L	ASTM440PH(AA) (HRC54° ±2°) ★
18.500*φd*L	SUS630(17-4PH)	37.000*φd*L	SUS630(17-4PH)	59.000*φd*L	SUS630(17-4PH)
19.000*φd*L	SUS303	37.500*φd*L	SUS303	60.000*φd*L	SUS303

耐衝擊性 Impact resistant 強 Strength ↕ 弱 Weakness

耐磨性 Wear resistant 強 Strength ↕ 弱 Weakness

★超精研磨圓棒的加工精度可達到小數點第3-4位（0.001），外徑公差可至±0.001mm。 Super finish grinding round bar can achieve the machining precision up to 3-4 decimal digits (0.001), and outer diameter tolerance can achieve up to ±0.001mm.

超精細研磨丸棒は小数点後の3~4及（0.001）の増加まで、外径公差が±0.001mmまで生産可能。

"★"常備在庫品 stock products

★依圖依樣尺寸公差要求可生產特殊、復合、異型、超大超微細超長組合成型制品。We can produce special、compound、special-shaped、super-large/super-thin/super-long combined profiling products according to requirements of drawings, samples and dimension tolerance.

図面、サンプル及び寸法の公差要求により可生产特殊、複合、異型、超大、超微細、超長の組合せ成型製品を生産できる

LZQ