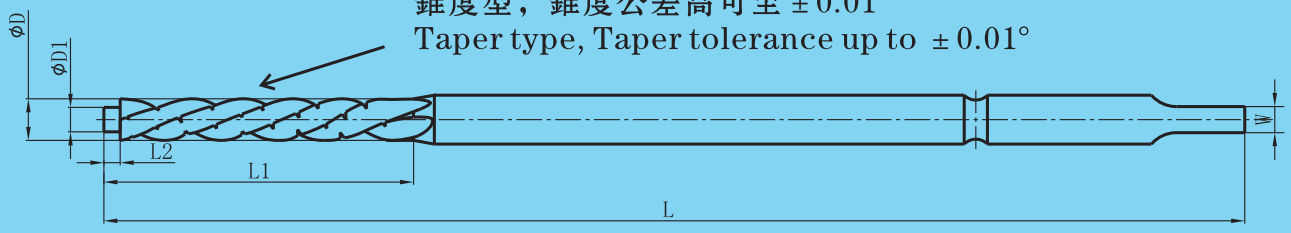

★刃口結構可以任意的排屑方式(如,上排屑、下排屑、左旋右切、右旋左切、左旋左切，右旋右切等等。高螺旋刃，低螺旋刃，帶導柱不帶導柱等等,結構形狀之方式.

edge structure can be applicable to any chip removing methods(such as, upper chip removal, lower chip removal, left handed right cutting, right handed left cutting, left handed left cutting, and right handed right cutting, etc. High helical edge, low helical edge, with guide pillar or without guide pillar, etc, different structures and shapes.

材料等級:
①超高防銹高耐磨不銹鋼系列(AA)(HRC54° ±2° 斷面)(常規常備)
②常規標準防銹高耐磨及超高耐磨系列(A)(常規常備)(HRC45° ~64° 斷面系列)
③超高耐磨高級高鈷粉末鋼ASP60A（HRC70° ±2° 斷面系列)
④超高耐磨硬質合金系列(AA)(HRA87° ~94° 系列)

Material grade:
①ultra-high anti-rust high wear-resistant stainless steel series (AA)(HRC54° ±2° Section)(regular stock)
②general standard anti-rust, high wear-resistant and ultra-high wear-resistant series (A)(HRC45° ~64° Section series)(regular stock)
③Super high wear resistant high-grade high cobalt powder steel ASP60A(HRC70° ±2° section series)
④ultra-high wear-resistant hard alloy series(AA)(HRA87° ~94° series)

★.依圖依樣尺寸/公差/要求復合成型加工可生産極爲復雜\\精密的柄部結構形狀。
Compound contour machining according to the sizes/ tolerances/ requirements of drawings and samples; we can produce extremely complex and accurate holder structure profile.
図面、サンプル、寸法または公差の要求により複合成型加工を行い、極めて複雑、精密な柄部の形狀を生産できる.

※必要可帶穿透&不穿透，不同等級加工的中空、空芯内孔加工。With or without penetration, hollow &hollow core inner hole process with different grades.必要に応じて、貫通付き&貫通なし、各レベル加工での中空、中空内穴加工。

★.依圖依樣尺寸/公差/要求復合成型加工可生産極爲復雜\\精密的柄部結構形狀。
Compound contour machining according to the sizes/ tolerances/ requirements of drawings and samples; we can produce extremely complex and accurate holder structure profile.
図面、サンプル、寸法または公差の要求により複合成型加工を行い、極めて複雑、精密な柄部の形狀を生産できる.

★、刃口結構可以任意的排屑方式(如,上排屑、下排屑、左旋右切、右旋左切、左旋左切，右旋右切等等。高螺旋刃，低螺旋刃，帶導柱不帶導柱等等,結構形狀之方式.
edge structure can be applicable to any chip removing methods(such as, upper chip removal, lower chip removal, left handed right cutting, right handed left cutting, left handed left cutting, and right handed right cutting, etc. High helical edge, low helical edge, with guide pillar or without guide pillar, etc, different structures and shapes.

材料等級:
①超高防銹高耐磨不銹鋼系列(AA)(HRC54° ±2° 斷面)(常規常備)
②常規標準防銹高耐磨及超高耐磨系列(A)(HRC45° ~64° 斷面 系列)(常規常備)
③超高耐磨高級高鈷粉末鋼ASP60A（HRC70° ±2° 斷面系列)
④超高耐磨硬質合金系列(AA)(HRA87° ~94° 系列)

Material grade:
① ultra-high anti-rust high wear-resistant stainless steel series (AA)(HRC54° ±2° Section)(regular stock)
② general standard anti-rust, high wear-resistant and ultra-high wear-resistant series (A) (HRC45° ~64° Section series)(regular stock)
③ Super high wear resistant high-grade high cobalt powder steel ASP60A(HRC70° ±2° section series)
④ ultra-high wear-resistant hard alloy series(AA)(HRA87° ~94° series)

★可超硬、超精研磨.任意的柄部類型.芯厚.容屑槽寬度.刃背方式.鑽尖方式.內冷却孔方式.刃部結構.刃口角度.刃口鋒利程度之要求.及高可至±0.003mm（3μm）的尺寸公差要求 We can produce with super hard and super finish grinding and satisfy your requirement of any type of shank, web thickness, width of chip flute, land, drill tip,inner cooling hole, structure of cutting edge, angle of cutting edge, degree of sharpness of cutting edge, and the dimension tolerance can be up to ±0.003mm（3μm）

依圖依樣尺寸公差要求可生產特殊、復合、异型、超大超細超長
組合成型的系列刀具。(可分不同等級的材料與研磨進行加工)

We can produce special, compound,special-shaped,super-large,
super- thin/super-long combined profile series tooling according
to requirements of drawings,samples and dimension tolerance.
(We can do process with different grades of material and grinding)

A:
材料等級:
①超高防銹高耐磨不銹鋼系列(AA)
(HRC54° ±2° 斷面)(常規常備)
②常規標準防銹高耐磨及超高耐磨
不銹鋼系列(A)(HRC45° ~64° 斷面 系列）
③超高耐磨高級高鈷粉末鋼ASP60A
(HRC70° ±2° 斷面系列)

A:
Material:
①Super-high anti-rust high wear
resistance stainless steel series(AA)
(HRC54° ±2° Section)(regular stock)
②General anti-rust high wear
resistance stainless steel series(A)
(HRC45° ~64° Section series）
③ Super high wear resistant high-grade high cobalt
powder steel ASP60A(HRC70° ±2° section series)

B:
空芯內孔加工等級(與材料等級和刃口加工等級無關):
① AAA級: 帶孔原生料+純鏡面空芯內孔研磨
(空芯內孔▼▼▼▼ &R0.01)(AAA)
(成本很高,不常用)
② AA級: 帶孔原生料,CFDA標準常規
空芯內孔(AA)(成本較高,不常用)
③ 電火花EDM加工AA&A級料+空芯內孔研磨
(空芯內孔研磨等級▼▼&▼▼▼等級不同，
成本也不同）（A&AA)(成本高,不常用)
④ 深孔鑽打孔AA&A級料空芯內孔(受限于內孔
徑與孔深度的比例,常規內孔徑x（40～60）倍左右
的孔深度）（B）（成本低，但需批量加工）(常規常備)
⑤ 電火花EDM加工AA&A級料空芯內孔,內孔
相對粗糙些（C）（成本低，常規常備）

B:
Hollow core inner hole process grade (independent of material
grade & edge process grade):
①AAA grade: raw material with hole + pure mirrow grinding of hollow
core inner hole (hollow core inner hole▼▼▼▼&R0.01) (AAA)
(high cost, not commonly used)
② AA grade: raw material with holes, CFDA standard hollow core
inner hole (AA) (relatively high cost, not commonly used)
③ Electrical discharge machining (EDM) process AA & A grade
material + hollow core inner hole grinding (hollow core inner hole
grinding grade▼▼&▼▼▼ Different cost for different grade) (A&AA)
(high cost, not commonly used)
④ Deep hole drilling AA&A grade material hollow core inner hole
(limited by the ratio of the inner hole diameter & hole depth, conventional inner
hole diameter x hole depth (40~60) times approximately) (B) (low cost, but requires batch processing)(regular stock)
⑤ Electrical discharge machining (EDM) processing AA & A grade raw material hollow core inner hole,
the inner hole is relatively rough (C) (low cost, regular stock)

★可超硬、超精研磨,任意的柄部類型,芯厚,容屑槽寬度,刃背方式,鑽尖方式,內冷却孔方式,刃部結構,刃口角度,刃口鋒利程度之要求,及高可至±0.003mm（3μm）
的尺寸公差要求 We can produce with super hard and super finish grinding and satisfy your requirement of any type of shank, web thickness, width of chip flute,
land, drill tip,inner cooling hole, structure of cutting edge, angle of cutting edge, degree of sharpness of cutting edge, and the dimension tolerance can
be up to ±0.003mm（3μm）

超高防銹高耐磨型（AA）&常規標準防銹超高耐磨型（A）
(ultra-high anti-rust high wear-resistant type（AA）&
general anti-rust high wear-resistant type（A))
超防錆高耐磨耗型(AA)&通常標準防錆超耐磨耗型(A)

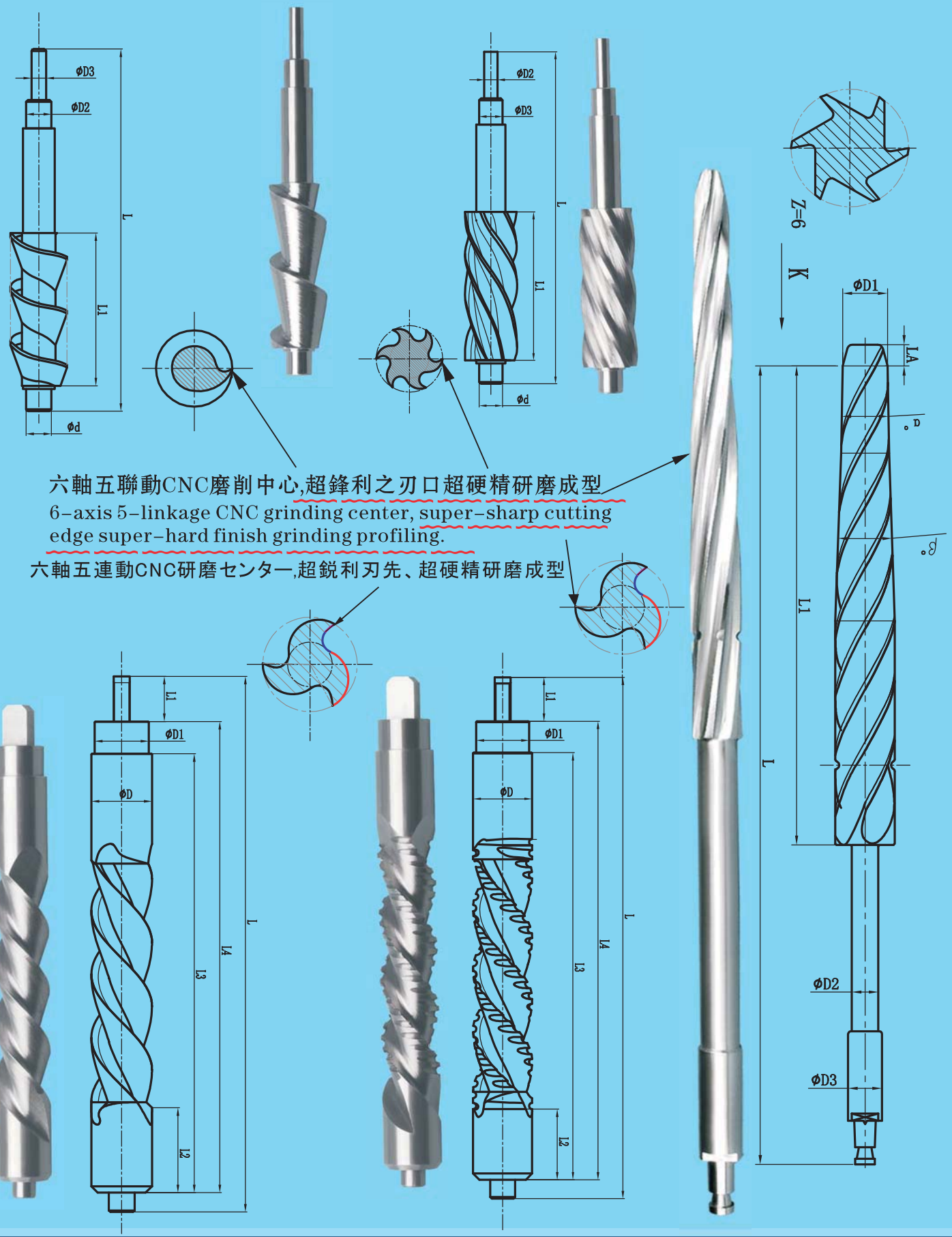

六軸五聯動CNC磨削中心,超鋒利之刃口超硬精研磨成型
6-axis 5-linkage CNC grinding center, super-sharp cutting edge super-hard finish grinding profiling.
六軸五連動CNC研磨センター,超鋭利刃先、超硬精研磨成型

※必要可帶穿透&不穿透，不同等級加工的中空、空芯内孔加工。With or without penetration, hollow &hollow core inner hole process with different grades.必要に応じて、貫通付き&貫通なし、各レベル加工での中空、中空内穴加工。

六軸五聯動CNC磨削中心,超鋒利之刃口超硬精研磨成型

6-axis 5-linkage CNC grinding center, super-sharp cutting edge super-hard finish grinding profiling.

六軸五連動CNC研磨センター,超鋭利刃先、超硬精研磨成型

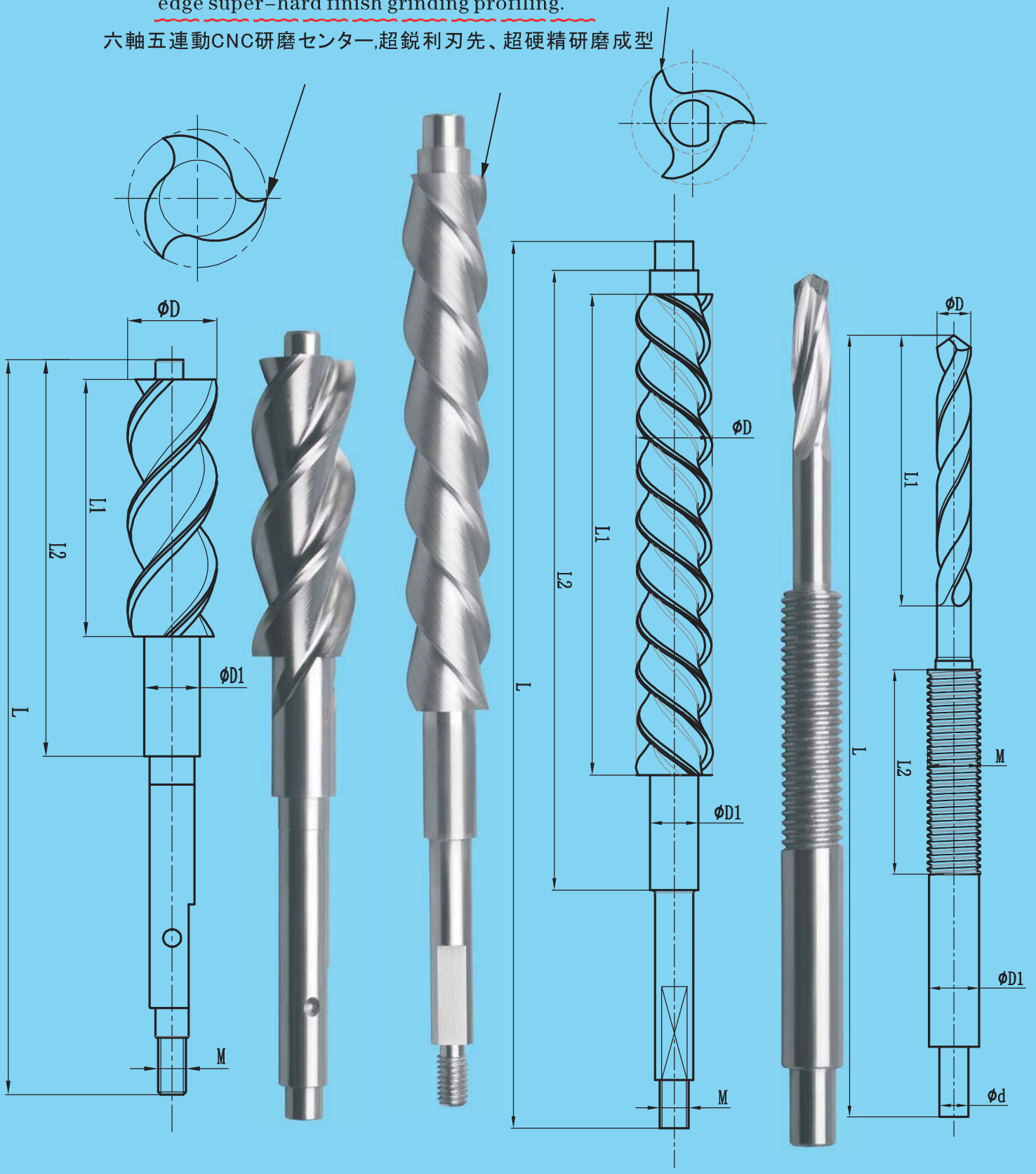

※必要可帶穿透&不穿透，不同等級加工的中空、空芯内孔加工。With or without penetration, hollow &hollow core inner hole process with different grades.必要に応じて、貫通付き&貫通なし、各レベル加工での中空、中空内穴加工。

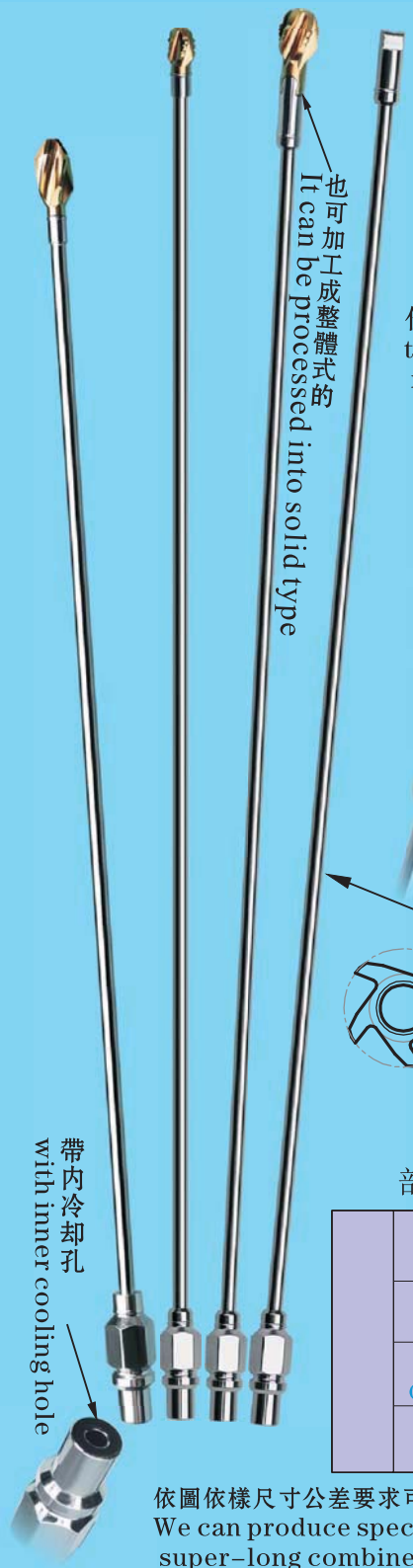

任意要求的鋒利刃
the sharp edge with any requirement

高回彈性,空芯内孔
high rebound resilience, hollow inner hole

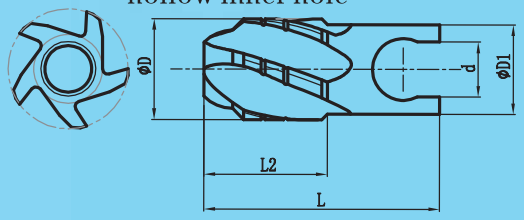

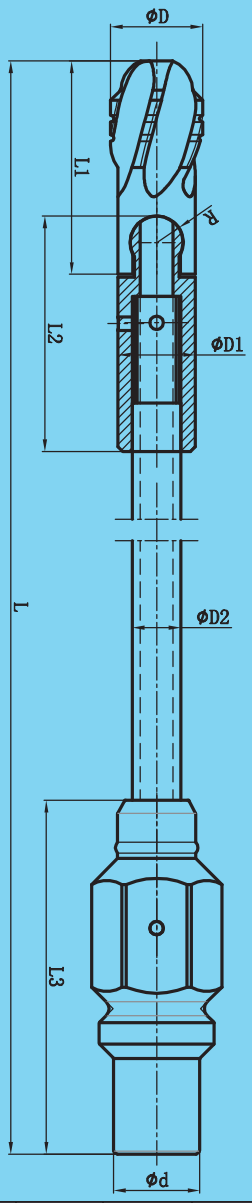

穿透式空芯内孔
hollow through hole

部分尺寸 some size

	刃徑ΦD Diameter	8.0	8.5	9.0	9.5	10.0	10.5	11
	柄徑ΦD1 Shank Dia.	8.0	8.0	8.0	8.0	8.0	8.0	8.0
	總長L Overall length	20	21	21	22	23	23	24
	刃數Z No. of flute	5	5	5	5	5	5	5

依圖依樣尺寸公差要求可生産特殊、復合、异型、超大超細超長組合成型的系列刀具。
We can produce special, compound, special-shaped, super-large, super- thin/ super-long combined profile series tooling according to requirements of drawings, samples and dimension tolerance.
図面、サンプル、または寸法の公差要求により特殊、複合、異型または超大、超細、超長の組合せ成型のシリーズカッタを生産できる。

※必要可帶穿透&不穿透，不同等級加工的中空、空芯内孔加工。
With or without penetration, hollow &hollow core inner hole process with different grades.
必要に応じて、貫通付き&貫通なし、各レベル加工での中空、中空内穴加工。

★可超硬、超精研磨, 任意的柄部類型. 芯厚. 容屑槽寬度. 刃背方式. 鑽尖方式. 内冷却孔方式. 刃部結構. 刃口角度. 刃口鋒利程度之要求, 及高可至±0.003mm（3μm）的尺寸公差要求 We can produce with super hard and super finish grinding and satisfy your requirement of any type of shank, web thickness, width of chip flute, land, drill tip,inner cooling hole, structure of cutting edge, angle of cutting edge, degree of sharpness of cutting edge, and the dimension tolerance can be up to ±0.003mm（3μm）

可依圖依樣研磨不同要求，不同形狀，不同角度，不同定位方式，不同鋒利性的刃部方式

We could grind cutting edge according to different requirements and shapes as customers' drawings or samples

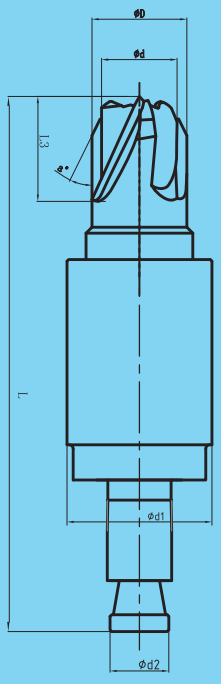

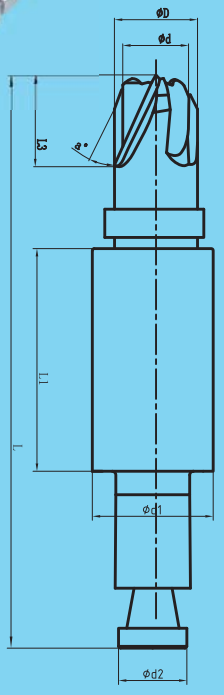

部分尺寸：some size

外刃徑ΦD Diameter	10.42	10.42	12.20	12.22	12.26	13.90	14.10	8.0	11.0	14.0
内刃徑Φd Shank Dia.	5.00	7.50	9.30	9.30	9.30	11.20	11.25	5.0	7.0	11.0
總長L Overall Length 総長さ	79.90	67.45	70.00	70.10	72.70	70.54	71.80	70	70	70

刃部及柄部结构均可依要求，制作不同材料,不同颜色的结构、形状方式

Production of cutting edge and shank could be as customers' requirement
We produce with different materials and colors
Different structures and shapes

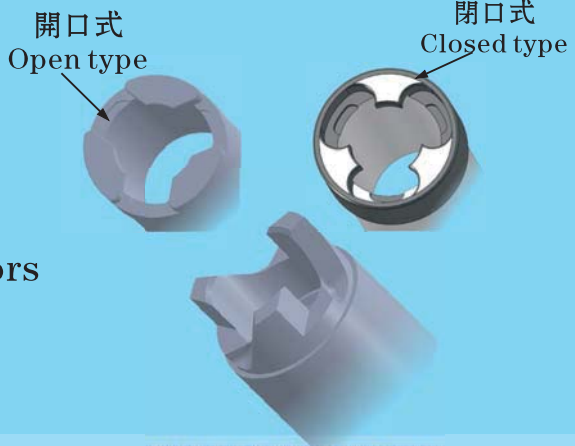

★可超硬、超精研磨，任意的柄部類型、芯厚、容屑槽寬度、刃背方式、鑽尖方式、内冷却孔方式、刃部結構、刃口角度、刃口鋒利程度之要求，及高可至±0.003mm（3μm）的尺寸公差要求 We can produce with super hard and super finish grinding and satisfy your requirement of any type of shank, web thickness, width of chip flute, land, drill tip,inner cooling hole, structure of cutting edge, angle of cutting edge, degree of sharpness of cutting edge, and the dimension tolerance can be up to ±0.003mm（3μm）

(高耐磨型&CNC锋利刃口&高精密度配合)
(High wear-resistant & CNC sharp edge & high precision with)
(高耐磨耗型&CNC鋭利刃先&高精度接合)

柄部接口方式:
①可做不同颜色的铝合金柄部结构
②可做不同颜色的钛合金柄部结构
③可做不同颜色的医用塑料/
树脂PPSU/PEEK等柄部结构
④可定做不锈钢类系列柄

Handle interface method:
① can do different colors aluminum handle
② can do different colors titanium handle
③ can do different colors of medical plastic / Resin PPSU / PEEK handle
④ can do stainless steel series handle

(可黄色及黑色涂层处理和光亮型、亚光型处理)

It can be with yellow or black coating, shiny or matt treatment

★可超硬、超精研磨,任意的柄部類型、芯厚、容屑槽寬度、刃背方式、鑽尖方式、内冷却孔方式、刃部結構、刃口角度、刃口鋒利程度之要求,及高可至±0.003mm（3μm）的尺寸公差要求 We can produce with super hard and super finish grinding and satisfy your requirement of any type of shank, web thickness, width of chip flute, land, drill tip,inner cooling hole, structure of cutting edge, angle of cutting edge, degree of sharpness of cutting edge, and the dimension tolerance can be up to ±0.003mm（3μm）

(高耐磨型&CNC锋利刃口&高精密度配合)
(High wear-resistant & CNC sharp edge & high precision with)
(高耐磨耗型&CNC鋭利刃先&高精度接合)

柄部接口方式:
①可做不同颜色的铝合金柄部结构
②可做不同颜色的钛合金柄部结构
③可做不同颜色的医用塑料/
树脂PPSU/PEEK等柄部结构
④可定做不锈钢类系列柄

Handle interface method:
① can do different colors aluminum handle
② can do different colors titanium handle
③ can do different colors of medical plastic / Resin PPSU / PEEK handle
④ can do stainless steel series handle

(可黄色及黑色涂层处理和光亮型、亚光型处理)

It can be with yellow or black coating, shiny or matt treatment

★可超硬、超精研磨,任意的柄部類型、芯厚、容屑槽寬度、刃背方式、鑽尖方式、内冷却孔方式、刃部結構、刃口角度、刃口鋒利程度之要求、及高可至±0.003mm（3μm）的尺寸公差要求 We can produce with super hard and super finish grinding and satisfy your requirement of any type of shank, web thickness, width of chip flute, land, drill tip,inner cooling hole, structure of cutting edge, angle of cutting edge, degree of sharpness of cutting edge, and the dimension tolerance can be up to ±0.003mm（3μm）

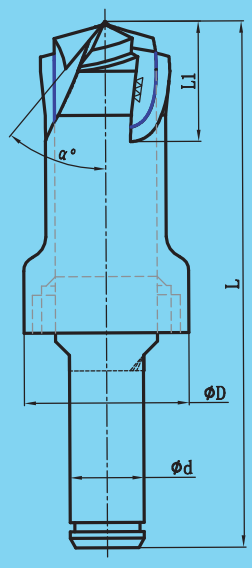

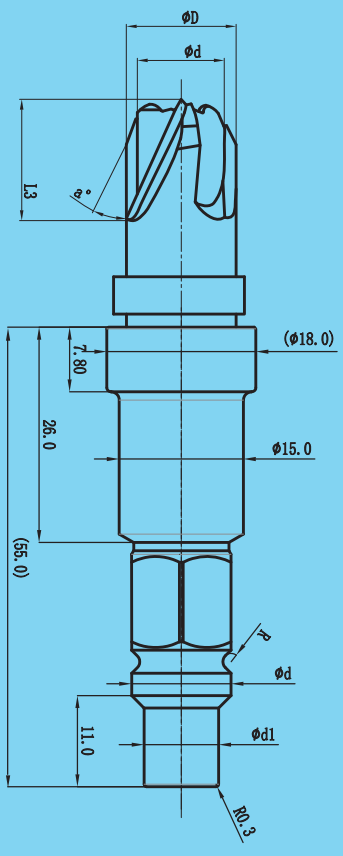

可依圖依樣研磨不同要求，不同形狀，不同角度，
不同定位方式，不同鋒利性的刃部方式

We could grind cutting edge according
to different requirements and shapes as
customers' drawings or samples

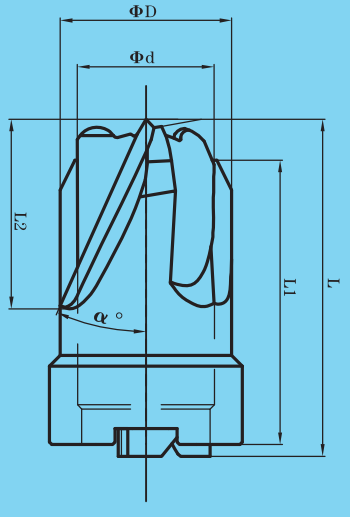

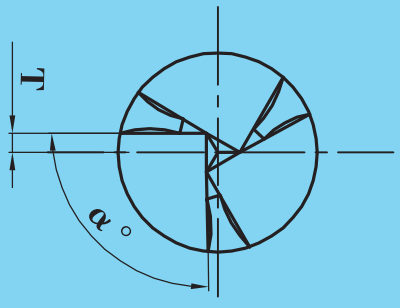

刃部及柄部结构均可依要求，制作不同材
料，不同颜色的结构、形状方式

Production of cutting edge and shank could
be as customers' requirement We produce
with different materials and colors
Different structures and shapes

★可超硬、超精研磨. 任意的柄部類型. 芯厚. 容屑槽寬度. 刃背方式. 鑽尖方式. 內冷却孔方式. 刃部結構. 刃口角度. 刃口鋒利程度之要求. 及高可至±0.003mm（3μm）的尺寸公差要求 We can produce with super hard and super finish grinding and satisfy your requirement of any type of shank, web thickness, width of chip flute, land, drill tip,inner cooling hole, structure of cutting edge, angle of cutting edge, degree of sharpness of cutting edge, and the dimension tolerance can be up to ±0.003mm（3μm）

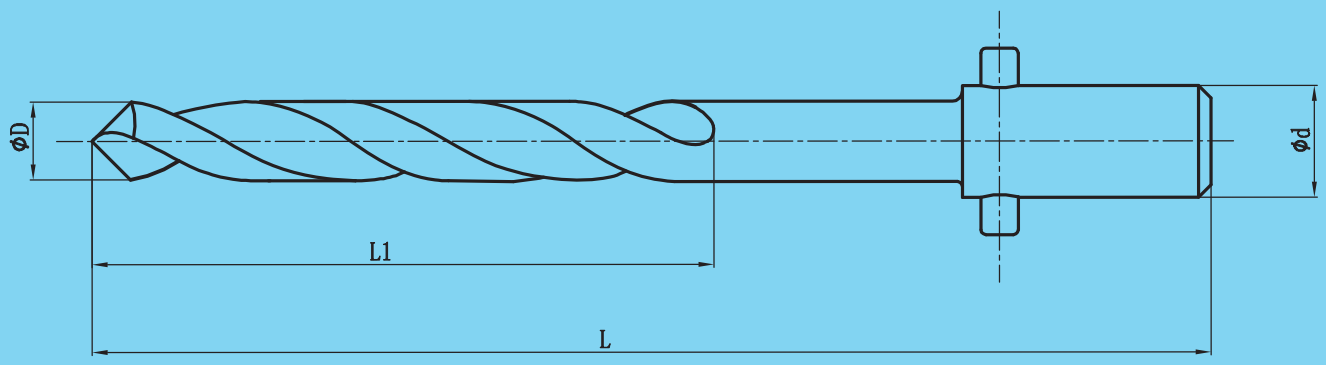

部分尺寸（AA/A）some size（AA/A）

刃徑ΦD Diameter	3.20	3.20
刃長L1 Length of cut	25	39
柄徑Φd Shank Dia.	4.50	4.50
總長L Overall length	45	60
刃數Z No. of flute	2	2

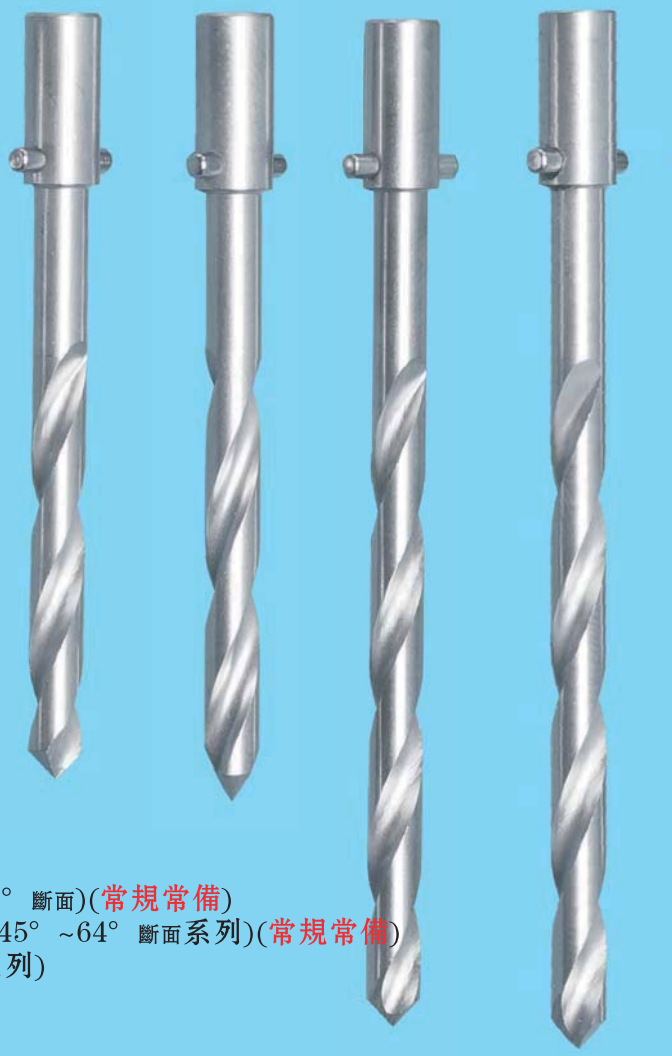

材料等級:
1超高防銹高耐磨不銹鋼系列(AA)(HRC54° ±2° 斷面)(常規常備)
2常規標準防銹高耐磨及超高耐磨系列(A)(HRC45° ~64° 斷面系列)(常規常備)
3超高耐磨硬質合金系列(AA)(HRA87° ~94° 系列)

Material grade:
①ultra-high anti-rust high wear-resistant stainless steel series (AA)
(HRC54° ±2° Section)(regular stock)
②general standard anti-rust, high wear-resistant and ultra-high wear-resistant series (A)(HRC45° ~64° Section series)
③ultra-high wear-resistant hard alloy series(AA)(HRA87° ~94° series)

★可超硬、超精研磨. 任意的柄部類型. 芯厚. 容屑槽寬度. 刃背方式. 鑽尖方式. 內冷却孔方式. 刃部結構. 刃口角度. 刃口鋒利程度之要求. 及高可至±0.003mm（3μm）的尺寸公差要求 We can produce with super hard and super finish grinding and satisfy your requirement of any type of shank, web thickness, width of chip flute, land, drill tip,inner cooling hole, structure of cutting edge, angle of cutting edge, degree of sharpness of cutting edge, and the dimension tolerance can be up to ±0.003mm（3μm）

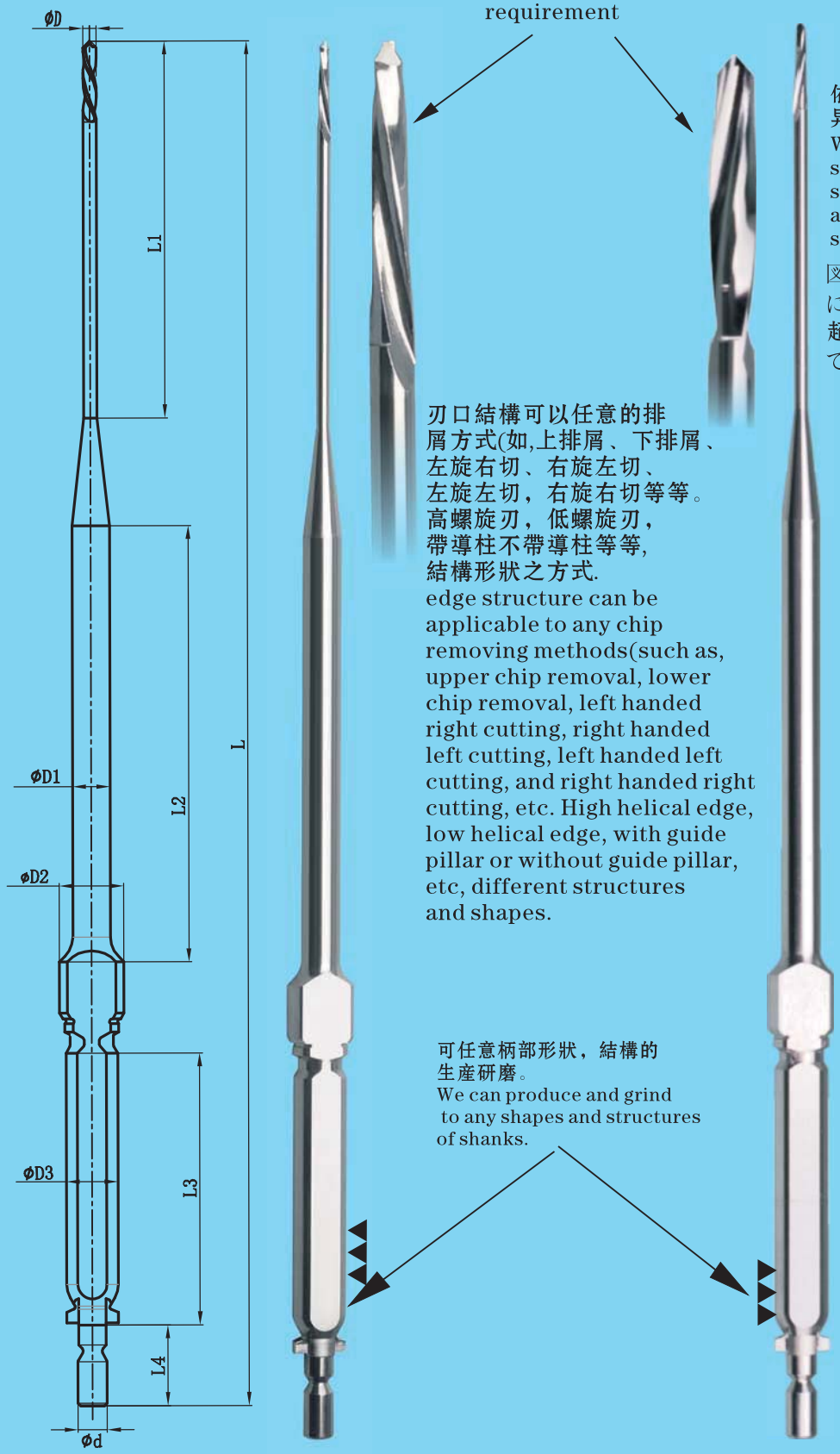

依圓依樣尺寸公差要求偶可生產特殊、復合、异型、超大超細超長組合成型的系列刀具。
We can produce special,compound, special-shaped,super-large,super-thin/ super-long combined profile series tooling according to requirements of drawings, samples and dimension tolerance.
図面、サンプル、または寸法の公差要求により特殊、複合、異型または超大、超細、超長の組合せ成型のシリーズカッタを生産できる。

材料等級:
①超高防銹高耐磨不銹鋼系列(AA)(HRC54° ±2° 斷面)(常規常備)
②常規標準防銹高耐磨及超高耐磨系列(A)(HRC45° ~64° 斷面系列)
③超高耐磨硬質合金系列(AA)(HRA87° ~94° 系列)
Material grade:
①ultra-high anti-rust high wear-resistant stainless steel series (AA)(HRC54° ±2° Section)(regular stock)
②general standard anti-rust, high wear-resistant and ultra-high wear-resistant series (A)(HRC45° ~64° Section series)
③ultra-high wear-resistant hard alloy series(AA)(HRA87° ~94° series)

※必要可帶穿透&不穿透，不同等級加工的中空、空芯內孔加工。
With or without penetration, hollow &hollow core inner hole process with different grades.
必要に応じて、貫通付き&貫通なし、各レベル加工での中空、中空内穴加工。

★可超硬、超精研磨,任意的柄部類型,芯厚,容屑槽寬度,刃背方式,鑽尖方式,內冷却孔方式,刃部結構,刃口角度,刃口鋒利程度之要求,及高可至±0.003mm（3μm）的尺寸公差要求 We can produce with super hard and super finish grinding and satisfy your requirement of any type of shank, web thickness, width of chip flute, land, drill tip,inner cooling hole, structure of cutting edge, angle of cutting edge, degree of sharpness of cutting edge, and the dimension tolerance can be up to ±0.003mm（3μm）

依圖依樣尺寸公差要求可生産特殊、復合、异型、超大超細超長組合成型的系列刀具。

We can produce special, compound,special-shaped,super-large, super- thin/super-long combined profile series tooling according to requirements of drawings,samples and dimension tolerance.

図面、サンプル、または寸法の公差要求により特殊、複合、異型または超大、超細、超長の組合せ成型のシリーズカッタを生産できる。

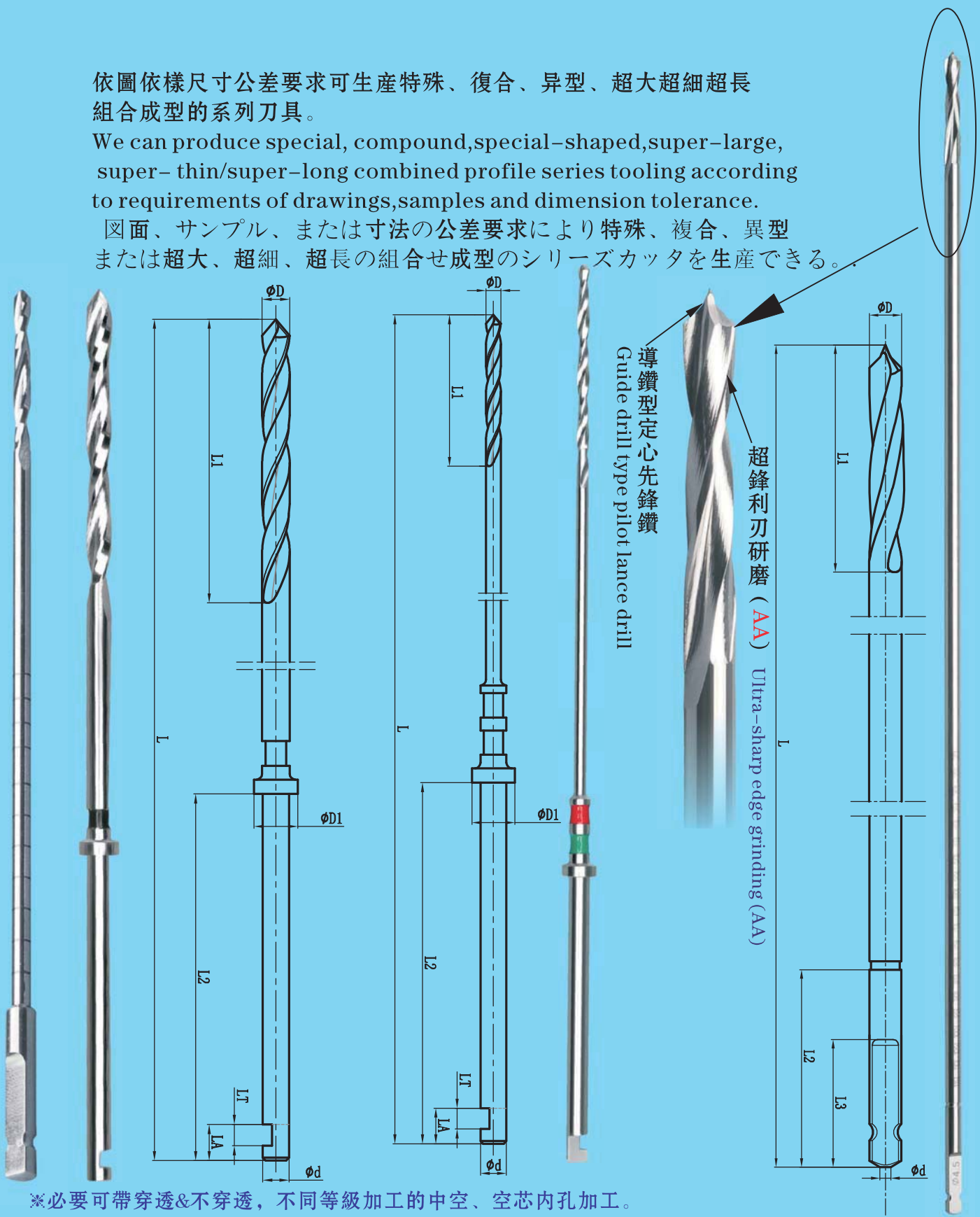

※必要可帶穿透&不穿透，不同等級加工的中空、空芯内孔加工。

With or without penetration, hollow &hollow core inner hole process with different grades.

必要に応じて、貫通付き&貫通なし、各レベル加工での中空、中空内穴加工。

★可超硬、超精研磨. 任意的柄部類型. 芯厚. 容屑槽寬度. 刃背方式. 鑽尖方式. 内冷却孔方式. 刃部結構. 刃口角度. 刃口鋒利程度之要求. 及高可至±0.003mm（3μm）的尺寸公差要求 We can produce with super hard and super finish grinding and satisfy your requirement of any type of shank, web thickness, width of chip flute, land, drill tip,inner cooling hole, structure of cutting edge, angle of cutting edge, degree of sharpness of cutting edge, and the dimension tolerance can be up to ±0.003mm（3μm）

※必要可帶穿透&不穿透，不同等級加工的中空、空芯內孔加工。
With or without penetration, hollow &hollow core inner hole process with different grades.
必要に応じて、貫通付き&貫通なし、各レベル加工での中空、中空内穴加工。

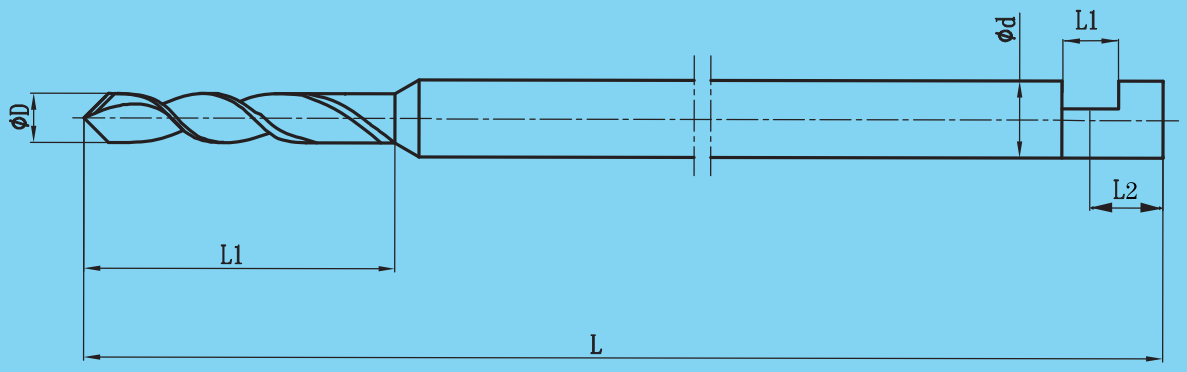

部分尺寸(AA):some size(AA)

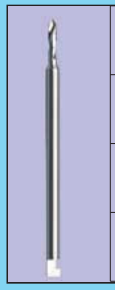	刃徑 φD Diameter	1.2	1.2	1.2	1.5	1.6	1.6	1.6	1.6	1.8	1.8
	刃長L1 Length of cut 刃の長さ	5	5	10	8	8	16	25	25	14	20
	柄徑 φd Shank Dia.	2.35	2.35	2.35	2.35	2.35	2.35	2.35	2.35	2.35	2.35
	總長L Overall length 総長さ	45	70	70	45	70	70	70	110	70	70

材料:
①超高防銹高耐磨不銹鋼系列(AA)(HRC54° ±2° 斷面)(常規常備)
②常規標準防銹高耐磨及超高耐磨不銹鋼系列(A)
(HRC45° ~64° 斷面系列)

Material:
①Super-high anti-rust high wear resistance stainless steel series(AA) (HRC54° ±2° Section)(regularly stock)
②General anti-rust high wear resistance stainless steel series(A) (HRC45° ~64° Section series)

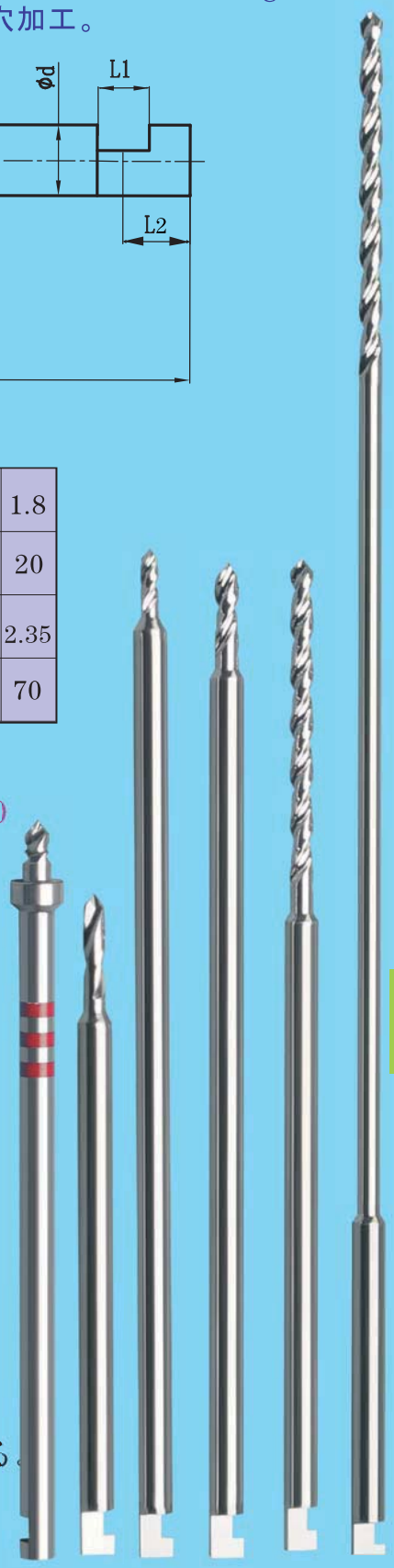

依圖依樣尺寸公差要求可生產特殊、復合、异型、超大超細超長組合成型的系列刀具。
We can produce special, compound,special-shaped,super-large, super- thin/super-long combined profile series tooling according to requirements of drawings,samples and dimension tolerance.
図面、サンプル、または寸法の公差要求により特殊、複合、異型または超大、超細、超長の組合せ成型のシリーズカッタを生産できる。

★可超硬、超精研磨. 任意的柄部類型. 芯厚. 容屑槽寬度. 刃背方式. 鑽尖方式. 內冷却孔方式. 刃部結構. 刃口角度. 刃口鋒利程度之要求. 及高可至 ±0.003mm（3μm）的尺寸公差要求 We can produce with super hard and super finish grinding and satisfy your requirement of any type of shank, web thickness, width of chip flute, land, drill tip,inner cooling hole, structure of cutting edge, angle of cutting edge, degree of sharpness of cutting edge, and the dimension tolerance can be up to ±0.003mm（3μm）

醫用工具及配件系列（鑽針、空芯鑽）
Medical tools and parts series(Maxillofacial drilling pin)
医療器具及び部品シリーズ（整形外科ドリルピン、中空ドリル）

(超高防锈型(AA)&超高耐磨型(A))
(High anti-rust type (AA)
& super wear-resistant type (A))
(超防錆型(AA)&超耐磨耗型(A))

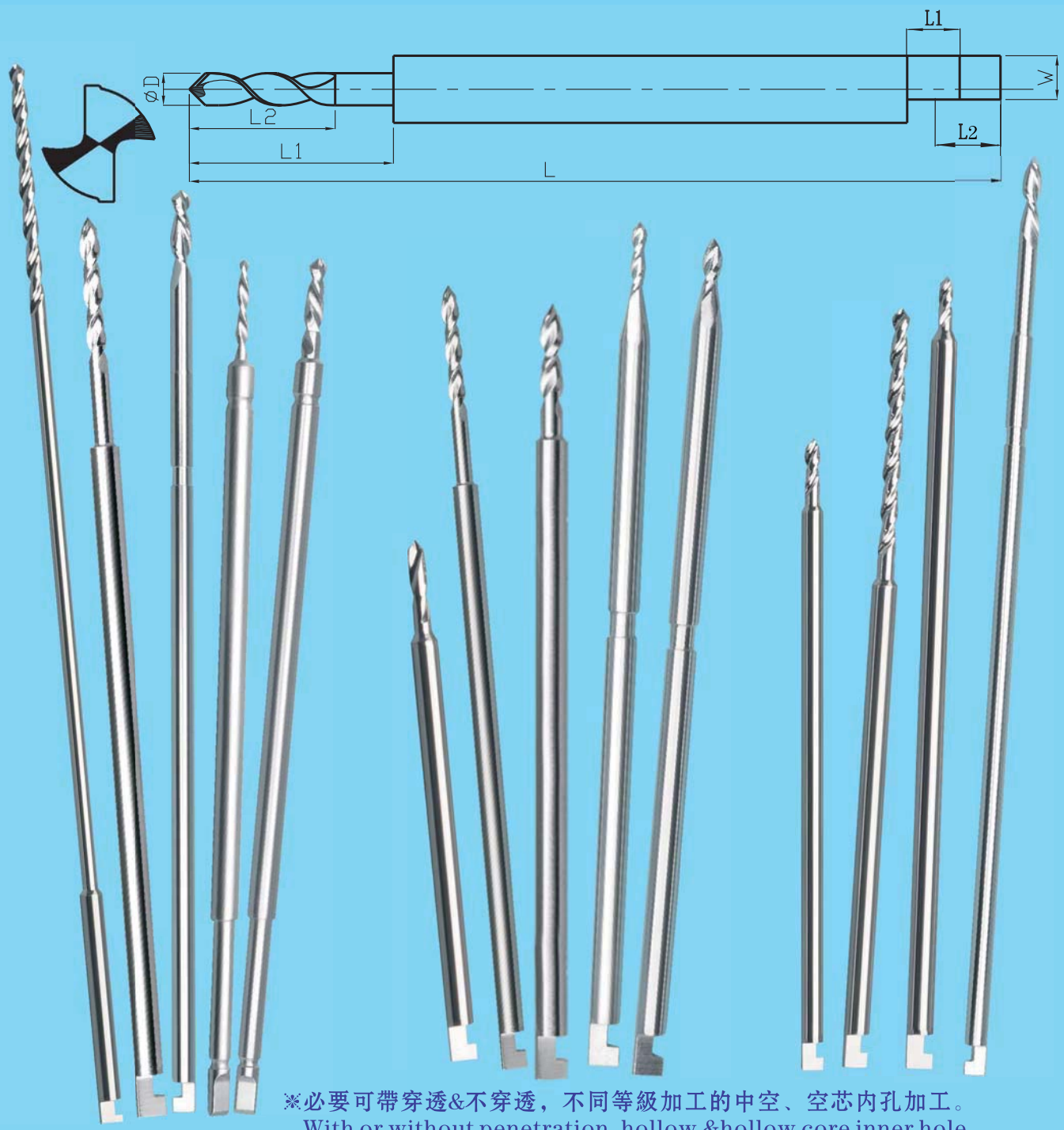

※必要可帶穿透&不穿透，不同等級加工的中空、空芯内孔加工。
With or without penetration, hollow &hollow core inner hole process with different grades.
必要に応じて、貫通付き&貫通なし、各レベル加工での中空、中空内穴加工。

部分尺寸(AA):some size(AA)

刃徑ΦD Diameter	1.1	1.1	1.1	1.1	1.1	1.1	1.2	1.3	1.5	1.5	1.5	1.5	1.5	1.5	1.6	1.7	1.9	2.1
刃長L1 Length of cut 刃の長さ	3.5	5.0	7.0	9.0	15	18	5.0	7.0	5.0	7.0	10	11	18	37	10	7.0	12	7.0
柄徑Φd Shank Dia.	2.35	2.35	2.35	2.35	2.35	2.35	2.35	2.35	2.35	2.35	2.35	2.35	2.35	2.35	2.35	2.35	2.35	2.35
總長L Overall length 総長さ	50	50	50	50	50	105	66	80	66	56	70	105	105	105	58	46.8	93	105

★可超硬、超精研磨. 任意的柄部類型. 芯厚. 容屑槽寬度. 刃背方式. 鑽尖方式. 內冷却孔方式. 刃部結構. 刃口角度. 刃口鋒利程度之要求. 及高可至±0.003mm（3μm）的尺寸公差要求 We can produce with super hard and super finish grinding and satisfy your requirement of any type of shank, web thickness, width of chip flute, land, drill tip,inner cooling hole, structure of cutting edge, angle of cutting edge, degree of sharpness of cutting edge, and the dimension tolerance can be up to ±0.003mm（3μm）

依圖依樣尺寸公差要求可生産特殊、復合、异型、超大超細超長
組合成型的系列刀具。
We can produce special, compound,special-shaped,super-large,
super- thin/super-long combined profile series tooling according
to requirements of drawings,samples and dimension tolerance.
図面、サンプル、または寸法の公差要求により特殊、複合、異型
または超大、超細、超長の組合せ成型のシリーズカッタを生産できる。

※必要可帶穿透&不穿透，不同等級加工的中空、空芯内孔加工。
With or without penetration, hollow & hollow core inner hole process with different grades.
必要に応じて、貫通付き&貫通なし、各レベル加工での中空、中空内穴加工。

★可超硬、超精研磨. 任意的柄部類型. 芯厚. 容屑槽寬度. 刃背方式. 鑽尖方式. 內冷却孔方式. 刃部結構. 刃口角度. 刃口鋒利程度之要求. 及高可至 ±0.003mm（3μm）的尺寸公差要求 We can produce with super hard and super finish grinding and satisfy your requirement of any type of shank, web thickness, width of chip flute, land, drill tip,inner cooling hole, structure of cutting edge, angle of cutting edge, degree of sharpness of cutting edge, and the dimension tolerance can be up to ±0.003mm（3μm）

依圖依樣尺寸公差要求可生產特殊、復合、异型、超大超細超長
組合成型的系列刀具。(可分不同等級的材料與研磨進行加工)

We can produce special, compound,special-shaped,super-large,
super- thin/super-long combined profile series tooling according
to requirements of drawings,samples and dimension tolerance.
(We can do process with different grades of material and grinding)

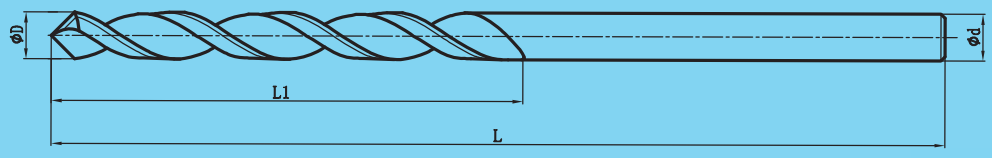

部分尺寸(A):some size(A)

	刃徑ΦD Diameter	1.1	1.5	2.0	2.5	3.2	4.0	4.5	6.0
	刃長L1 Length of cut	15	30	50	50	60	60	60	60
	柄徑Φd Shank Dia.	1.1	1.5	2.0	2.5	3.2	4.0	4.5	6.0
	總長L Overall length	35	60	100	110	145	155	195	195
	刃數Z No. of flute	2	2	2	2	2	2	2	2

材料:
①超高防銹高耐磨不銹鋼系列(AA)(HRC54° ±2° 斷面)(常規常備)
②常規標準防銹高耐磨及超高耐磨不銹鋼系列(A)(HRC45° ~64° 斷面系列)

Material:
①Super-high anti-rust high wear
resistance stainless steel series(AA)
(HRC54° ±2° Section)(regularly stock)
②General anti-rust high wear
resistance stainless steel series(A)
(HRC45° ~64° Section series)

※必要可帶穿透&不穿透，不同等級加工的中空、空芯内孔加工。
With or without penetration, hollow &hollow core inner hole process
with different grades.
必要に応じて、貫通付き&貫通なし、各レベル加工での中空、中空内穴加工。

★可超硬、超精研磨，任意的柄部類型，芯厚，容屑槽寬度，刃背方式，鑽尖方式，内冷却孔方式，刃部結構，刃口角度，刃口鋒利程度之要求，及高可至±0.003mm（3μm）的尺寸公差要求 We can produce with super hard and super finish grinding and satisfy your requirement of any type of shank, web thickness, width of chip flute, land, drill tip,inner cooling hole, structure of cutting edge, angle of cutting edge, degree of sharpness of cutting edge, and the dimension tolerance can be up to ±0.003mm（3μm）

依圖依樣尺寸公差要求可生產特殊、復合、异型、超大超細超長
組合成型的系列刀具。(可分不同等級的材料與研磨進行加工)

We can produce special, compound,special-shaped,super-large,
super- thin/super-long combined profile series tooling according
to requirements of drawings,samples and dimension tolerance.
(We can do process with different grades of material and grinding)

材料等級:
①超高防銹高耐磨不銹鋼系列(AA)(HRC54° ±2° 斷面)(常規常備)
②常規標準防銹高耐磨及超高耐磨不銹鋼系列(A)(HRC45° ~64° 斷面系列)

Material:
①Super-high anti-rust high wear
resistance stainless steel series(AA)
(HRC54° ±2° Section)(regularly stock)
②General anti-rust high wear
resistance stainless steel series(A)
(HRC45° ~64° Section series)

部分尺寸(A): some size

刃徑ΦD Diameter	2.2	2.5	2.8	4.3
刃長L1 Length of cut	20	20	28.5	45
柄徑Φd Shank Dia.	4.5	4.5	4.5	4.5
總長L Overall length	210	200	147	270
刃數Z No. of flute	3	3	2	2

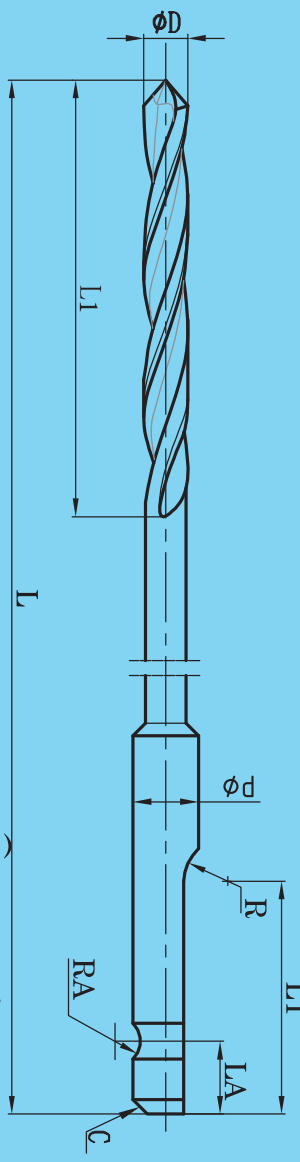

加工等级:
①全精研磨、超高同心度、跳动（AA）（需定制）
②一般加工、研磨、高同心度、跳动（A）
③一般加工（B）（常规）

Processing:
1. Full finish grinding,super-high concentricity,
runout(AA) (customize)
2. General processing,grinding,
high concentricity,runout(A)
3. General processing(B)(regular)

※必要可帶穿透&不穿透，不同等級加工的中空、空芯内孔加工。
With or without penetration, hollow &hollow core inner hole
process with different grades.
必要に応じて、貫通付き&貫通なし、各レベル加工での中空、中空内穴加工。

★可超硬、超精研磨. 任意的柄部類型. 芯厚. 容屑槽寬度. 刃背方式. 鑽尖方式. 内冷却孔方式. 刃部結構. 刃口角度. 刃口鋒利程度之要求. 及高可至±0.003mm（3μm）的尺寸公差要求 We can produce with super hard and super finish grinding and satisfy your requirement of any type of shank, web thickness, width of chip flute, land, drill tip,inner cooling hole, structure of cutting edge, angle of cutting edge, degree of sharpness of cutting edge, and the dimension tolerance can be up to ±0.003mm（3μm）

依圖依樣尺寸公差要求可生產特殊、復合、异型、超大超細超長
組合成型的系列刀具。(可分不同等級的材料與研磨進行加工)

We can produce special, compound,special-shaped,super-large,
super- thin/super-long combined profile series tooling according
to requirements of drawings,samples and dimension tolerance.
(We can do process with different grades of material and grinding

材料:
①超高防銹高耐磨不銹鋼系列(AA)(HRC54° ±2° 斷面)(常規常備)
②常規標準防銹高耐磨及超高耐磨不銹鋼系列(A)(HRC45° ~64° 斷面系列)

Material:
①Super-high anti-rust high wear
resistance stainless steel series(AA)
(HRC54° ±2° Section)(regularly stock)
②General anti-rust high wear
resistance stainless steel series(A)
(HRC45° ~64° Section series)

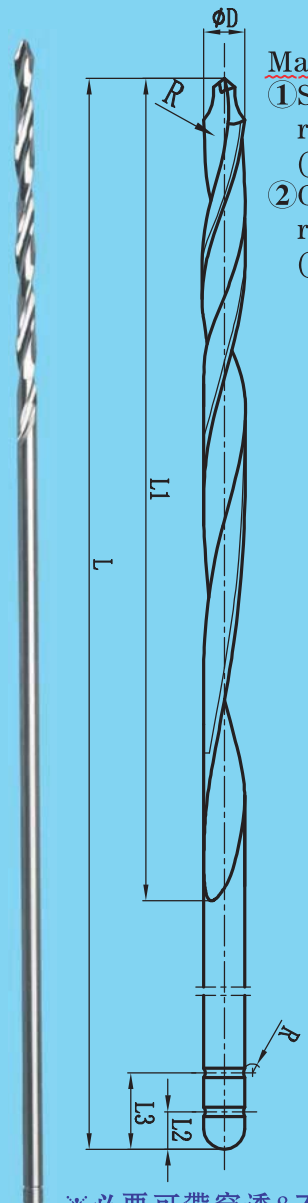

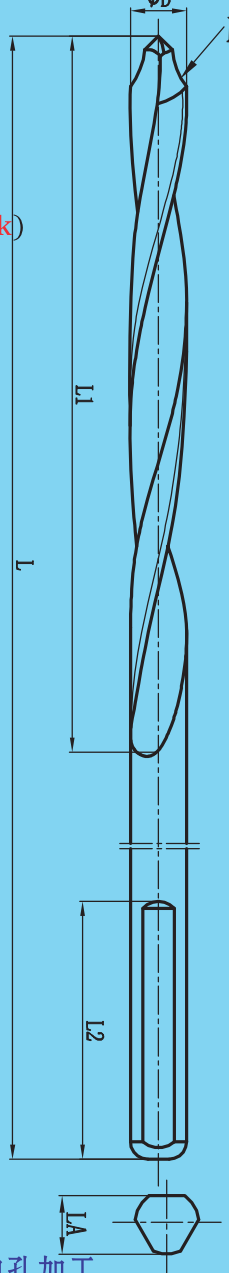

部分尺寸(A) some size

刃徑ΦD Diameter	2.0	2.7	4.8
刃長L1 Length of cut	41	41	61.5
柄徑Φd Shank Dia.	2.0	2.7	4.8
總長L Overall length	127	127	280
刃數Z No. of flute	2	2	2

※必要可帶穿透&不穿透，不同等級加工的中空、空芯内孔加工。
With or without penetration, hollow &hollow core inner hole
process with different grades.
必要に応じて、貫通付き&貫通なし、各レベル加工での中空、中空内穴加工。

★可超硬、超精研磨. 任意的柄部類型. 芯厚. 容屑槽寬度. 刃背方式. 鑽尖方式. 内冷却孔方式. 刃部結構. 刃口角度. 刃口鋒利程度之要求. 及高可至±0.003mm（3μm）的尺寸公差要求 We can produce with super hard and super finish grinding and satisfy your requirement of any type of shank, web thickness, width of chip flute, land, drill tip,inner cooling hole, structure of cutting edge, angle of cutting edge, degree of sharpness of cutting edge, and the dimension tolerance can be up to ±0.003mm（3μm）

依圖依樣尺寸公差要求可生産特殊、復合、异型、超大超細超長
組合成型的系列刀具。
We can produce special, compound,special-shaped,super-large,
super- thin/super-long combined profile series tooling according
to requirements of drawings,samples and dimension tolerance.
図面、サンプル、または寸法の公差要求により特殊、複合、異型
または超大、超細、超長の組合せ成型のシリーズカッタを生産できる。.

超長型L÷ΦD=50~300倍系列，刃柄同心度◎,跳動度↗高可至∀0.003mm（3mm）系列。
Super long type L÷ΦD=50~300 times series, Concentricity◎ of the flutes and shanks,
Runout↗ up to ∀0.003mm（3mm）series.

※必要可帶穿透&不穿透，不同等級加工的中空、空芯内孔加工。
With or without penetration, hollow &hollow core inner hole process with different grades.
必要に応じて、貫通付き&貫通なし、各レベル加工での中空、中空内穴加工。

★可超硬、超精研磨. 任意的柄部類型. 芯厚. 容屑槽寬度. 刃背方式. 鑽尖方式. 内冷却孔方式. 刃部結構. 刃口角度. 刃口鋒利程度之要求. 及高可至±0.003mm（3μm）的尺寸公差要求 We can produce with super hard and super finish grinding and satisfy your requirement of any type of shank, web thickness, width of chip flute, land, drill tip,inner cooling hole, structure of cutting edge, angle of cutting edge, degree of sharpness of cutting edge, and the dimension tolerance can be up to ±0.003mm（3μm）

★.依圖依樣尺寸/公差/要求復合成型加工可生産極爲復雜\\精密的柄部形狀。
Compound contour machining according to the sizes/ tolerances/ requirements of drawings and samples, we can produce extremely complex and accurate holder profile.
図面、サンプル、寸法または公差の要求により複合成型加工を行い、極めて複雑、精密な柄部の形状を生産できる.

特殊的刃部結構
Special structure of cutting edge

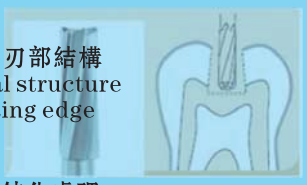

後段可鈍化處理
The back part can be passivated

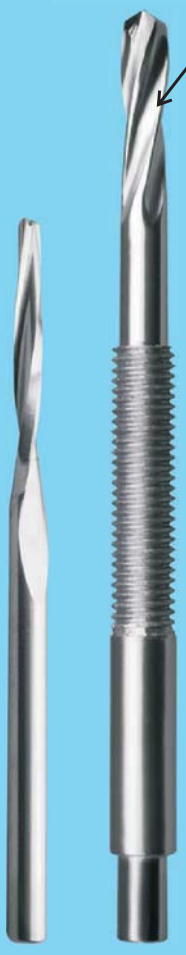

可帶内孔
It can have inner hole

批量時依圖依樣可生産多種的頂角、切刃形狀及μm級尺寸公差的成型鑽。
When producing in batch, we can produce forming drill bits with many kinds of apex angles, cutting-edge forms and μm dimension tolerance.
多量注文の場合、図面またはサンプルにより多種のコーナーアングル、刃の形状及びμm級の成型ドリルを生産できる

※必要可帶穿透&不穿透，不同等級加工的中空、空芯内孔加工。
With or without penetration, hollow & hollow core inner hole process with different grades.

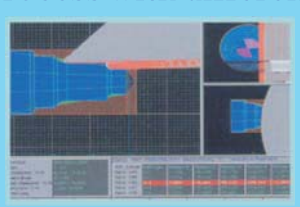

★可超硬、超精研磨，任意的柄部類型、芯厚、容屑槽寬度、刃背方式、鑽尖方式、内冷却孔方式、刃部結構、刃口角度、刃口鋒利程度之要求，及高可至±0.003mm（3μm）的尺寸公差要求 We can produce with super hard and super finish grinding and satisfy your requirement of any type of shank, web thickness, width of chip flute, land, drill tip,inner cooling hole, structure of cutting edge, angle of cutting edge, degree of sharpness of cutting edge, and the dimension tolerance can be up to ±0.003mm（3μm）

钻尖种类及应用
drilltip and appliction
ドリルポイントの種類とアプリケーション

◆具代表性的頂端切刃形狀
Representative top cutting-edge form

形狀 Profile	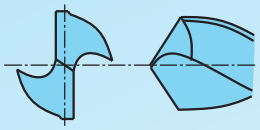 （圓錐切削刃） Taper cutting edge	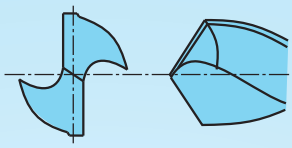 （平面二重切削刃） Plane dual cutting edge	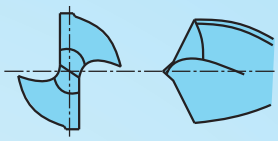 （蠟燭型切削刃） Candle cutting edge
特徵 Features	●後刀面呈圓錐面，越是向鑽頭中心，後角越大。 Major flank is taper surface, if it is closer to the Core bit, the back rake angle will be larger ●為普通形狀，軟材料及高硬度材料 均可加工。 Normal profile, soft material and high hard materials can process	●為用平面磨削後刀面的鑽頭，磨削方便，且咬住入性能良好。 Plane grinding major flank's drill bit, easy for grinding, and with good grip performance ●小直徑鑽頭常用 Commonly used for small-diameter drill bit	●兩重頂角的鑽頭，向心性良好，穿通時的毛刺少。 Double apex angle's drill bits, with good centrality, and less burrs when drill through ●是加工薄板及型材的鑽頭。 It is the drill bit to process thin boards and profiles.

◆ 橫刃修磨 Chisel edge grinding

鑽頭切削刃的前角越靠近鑽頭中心部越小，在橫刃部分呈負前角。切削時中心部分擠壓材料，產生的切削抵抗占50%~70%，而橫刃修磨對于降低鑽頭的切削抵抗、排出橫刃部分產生的切屑以及提高切入性都非常有效。

The closer, the rake angle of drill bit's cutting-edge to the drill bit, the smaller, the center part, and it is negative rake angle at chisel edge part. When cutting, the center part extrudes the materials, and the cutting resistance produced account for 50%-70%, but chisel edge grinding is very efficient in lowering the drill bit's cutting resistance, discharging the cutting produced at chisel edge part and improving cut-in performance.

形狀 Profile	X型 Type X	XR型 Type XR	S型 Type S	N型 Type N
特徵 Features	軸向負荷大幅降低，切入性提高。鑽心直徑大時有效。 Axial load is greatly reduced, cut-in performance is improved, and efficient when the core bit diameter is large	切入性比X型稍差，但切削刃強度高，工件材料適用範圍廣，使用壽命長。 Cut-in is not as good as that of Type X, but cutting edge strength is high, work piece material is widely applicable, and lifetime is long	容易磨削，一般用得較多。 Easy for grinding, generally it is used more	鑽心直徑較大時有效。 Efficient when the diameter of bit core is larger
主要用途 Main application	一般加工，深孔加工 General machining, machining of deep hole	一般加工不銹鋼。 General machining of stainless steel	鋼、鑄鐵及有色金屬的一般加工。 General machining of steel, casting steel and non-ferrous metal	深孔加工。 Machining of deep hole

◆ 鑽頭加工時的切屑 Chips when drill bit is processed

切屑種類 Cutting type	形狀 Profile	特徵與排出性能 Features and discharge performance
1. 圓錐螺旋形 Taper helical		從切削刃部流出的扇形切屑經容屑槽卷曲形成。在低進給加工延展性材料時產生。數卷後即折斷則切屑排出性能好。 The fan chip from cutting edge is formed via chip flute ,when machining ductile materials at low feed, and will break when there are many rolls, so chip discharge is good
2.長齒形 Long gear		生成切屑不卷曲,照原樣排出，排出時容易纏住鑽頭。 Formed chips don't crimp, and are discharged as is and easy to entwine drill bit when discharging
3.扇　形 Fan		切屑由容屑槽與加工孔壁控制分斷，在高進給情況下產生.切屑處理性能好。 Chips are controlled by chip flute and processed hole-wall, formed at high feed, and chip disposal is good
4.過渡折斷形 Over breaking		圓錐螺旋形切屑,受加工孔壁的約束，在即將成為長節距前，由于材料塑性不足,切屑斷裂。切屑排出順暢,切屑處理性能良好。 Taper helical chips are restrained by processed hold wall. Before growing into long way of mesh, chips are broken and discharged smoothly because of insufficient material plastics, so chip disposal is good
5.Z字形 Z-profile	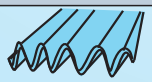	生成的切屑由于容屑槽形狀、材料特性等被擠壓、折叠，容易引起槽內阻塞。 Formed chips are squeezed, folded due to profile of chip flute, material characteristics etc, and easily lead to jamming inside the flute
6.針形 Needle		脆質材料或小卷切屑受振動分斷產生。切屑排出順暢，但有時會在槽內阻塞。 Brittle materials or small rolls of chips are formed by vibration breaking, chips are discharged smoothly, but sometimes they are jammed inside the flute

钻尖种类及应用
drilltip and appliction
ドリルポイントの種類とアプリケーション

（超高耐磨型/高耐衝撃用/高精密度）
(Super high wear resistance/
high impact resistance application/high precision)
(超高耐摩耗型/高耐衝撃用/高精密度)

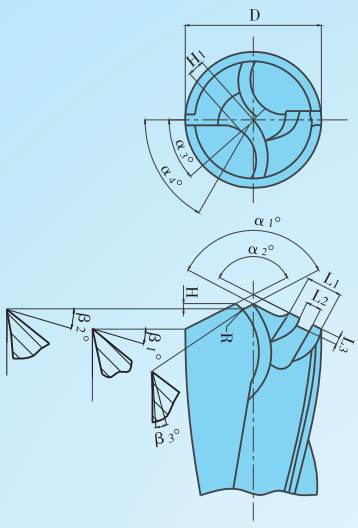

加工不銹鋼的鑽頭
Drill bit for machining stainless steel
ステンレスを加工するドリル

A

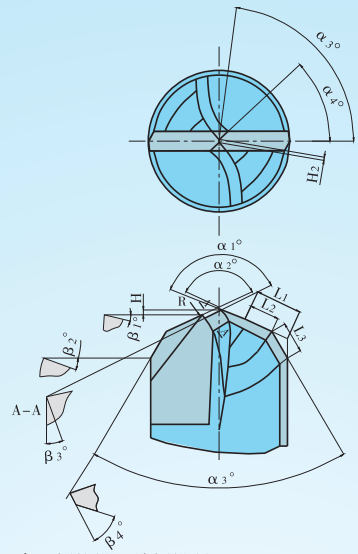

加工高錳鋼的鑽石鎢鋼鑽頭
Diamond tungsten steel drill bit for machining high manganese steel高マンガン鋼を加工するダイ
ヤモンドタングステン鋼ドリル

B

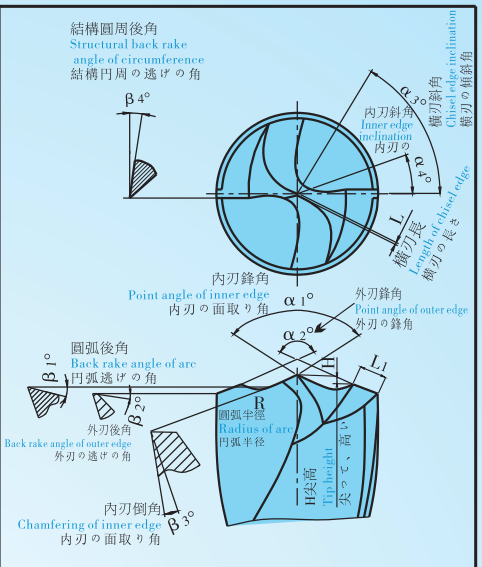

多刃尖標準麻花鑽（ φ2mm~φ15mm）
Multi-tip standard twist drill
多刃、尖っていて、標準ツイストドリル

C

小鑽頭上優勝的分屑措施
A雙重鋒角
B單邊第二鋒角
C單邊分屑槽
D臺階刃
E加大鋒角
F鑽刃磨偏

Superior chip-split measures on small drill bit
A double-head point angle
B Single-sided secondary point angle
C single-sided chip-split groove
D step edge
E enlarge point angle
F deflecting grinding of drill edge

小型ドリルの優れた屑分離措置
A ダブルヘッド鋒角
B 片側第二鋒角
C 片側屑分離溝
D 階段刃
E 鋒角の拡大
F ドリル刃の研磨ずれ

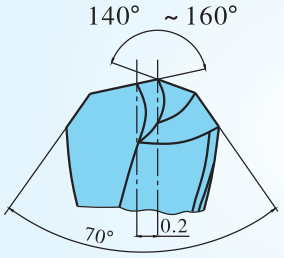

A

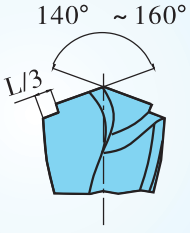

B

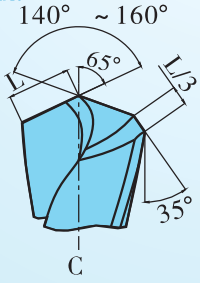

C

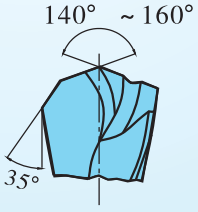

D

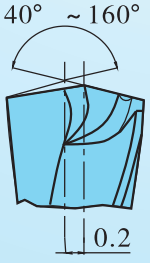

E

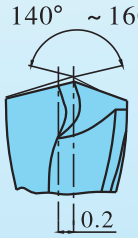

F

D

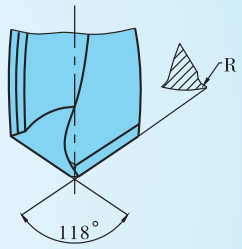

斷屑鑽頭
Chip-breaking drill bit
ブレーカ・ドリル

E

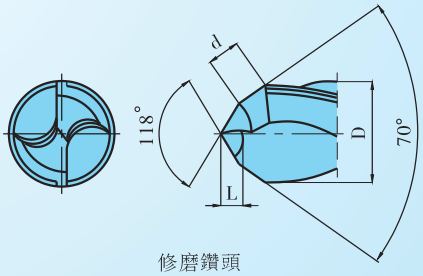

修磨鑽頭
Regrinding drill bit
ドリルの研磨

F

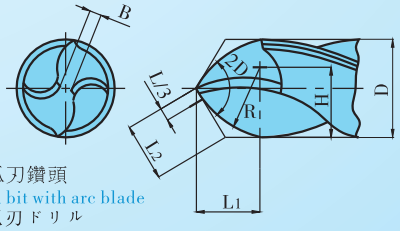

圓弧刃鑽頭
Drill bit with arc blade
円弧刃ドリル
R≈L1≈H ≈(06~0.65)D
B=(0.03~0.05)D
L2主切削刃長度
Main-cutting of length(L2)
L2主切削刃の長さ

G

★亦可依圖依樣、要求成型精研磨加工。We can also profile and precision grinding machining according to requirements of drawings, samples.
図面、サンプル、要求により成型仕上げ研磨加工をしてもいい.

钻尖种类及应用
drilltip and appliction
ドリルポイントの種類とアプリケーション

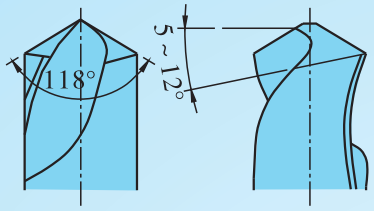

一般鑽孔之場合
General occasion for drilling holes
普通の穿孔の場合

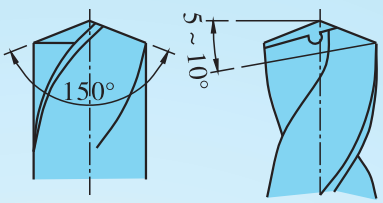

強韌刃鋼、硬質材料
Strengthened and toughness shear-steel, hard make
強靭な刃用鋼、硬質材料

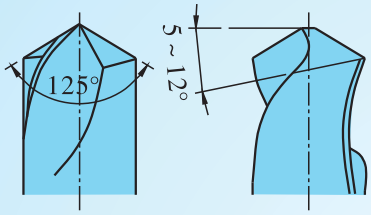

合金鋼、熱處理鋼、不銹鋼
Alloy steel, heat treatment steel, stainless steel
合金鋼、熱処理鋼、ステンレス・スチール

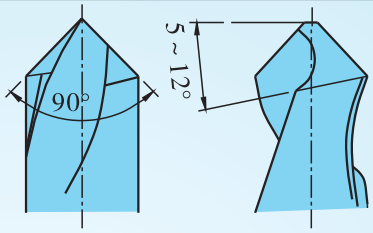

鑄鐵、鋁
Cast iron, aluminum
鋳鉄、アルミニウム

刀刃形狀Shap of cutting edge　刃の形状

①CNC 用鑽頭
drill bit for CNC application
CNC用ドリル

②高硬度用直柄鑽頭
Plain shank drill bit for high hardness application
高硬さ用直柄ドリル

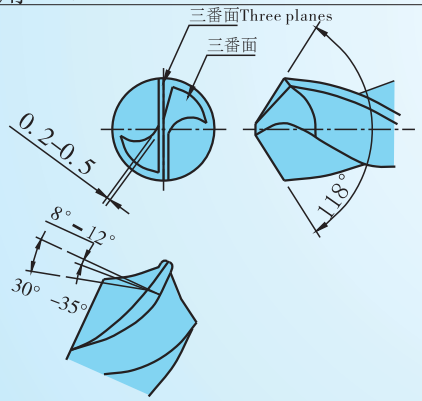

先端角變化後之切刃形狀
Cutting-edge profile after point angle changes
先端角の変えた後の切刃の形状

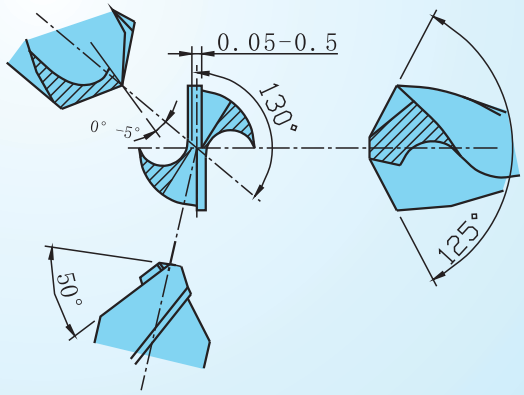

加工高錳鋼的群鑽
Masses drill for machining high manganese steel
高マンガン加工用集合ドリル

即使同樣之螺旋角，先端角這118° 之時刃口是直綫，但135° 為內圓形，90° 為外圓形。
Even the same helix angle, when point angle is 118° , cutting-edge is straight line, but if 135° it is an internal cylinder, if 90° , it is a cylinder.
同じ螺旋角であっても、先端角が118° である場合、直線となり、135° 、90° である場合、それぞれ内円形と外円形　となる。

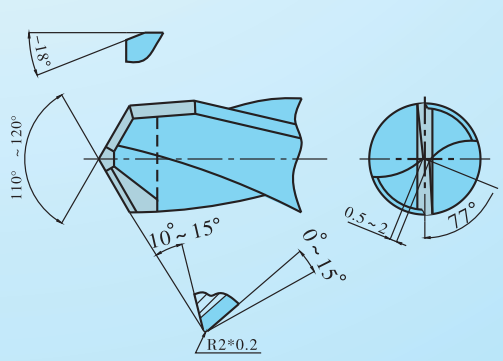

★亦可依圖依樣、要求成型精研磨加工。
We can also profile and precision grinding machining according to requirements of drawings, samples.
図面、サンプルまたは要求により成型したり、仕上げ研磨の加工を行ったりしてもいい

金屬加工時螺紋底孔直徑參考
The diameter of the thread bottom hole during metal machining as reference

◆. 公制普通螺紋
Metric general screw thread

螺紋代號 Symbol of thread	鑽頭直徑 Drill bit Dia.	
	ASP60A	Carbide
M1.0 *0.25	0.75	0.75
M1.1 *0.25	0.85	0.85
M1.2 *0.25	0.95	0.95
M1.4 *0.3	1.10	1.10
M1.6 *0.35	1.25	1.30
M1.7 *0.35	1.35	1.40
M1.8 *0.35	1.45	1.50
M2.0 *0.4	1.60	1.65
M2.2 *0.45	1.75	1.80
M2.3 *0.4	1.90	1.95
M2.5 *0.45	2.10	2.15
M2.6 *0.45	2.15	2.20
M3.0 *0.5	2.50	2.55
M3.5 *0.6	2.90	2.95
M4.0 *0.7	3.3	3.4
M4.5 *0.75	3.8	3.9
M5.0 *0.8	4.2	4.3
M6.0 *1.0	5.0	5.1
M7.0 *1.0	6.0	6.1
M8.0 *1.25	6.8	6.9
M9.0 *1.25	7.8	7.9
M10.0 *1.5	8.5	8.7
M11.0 *1.5	9.5	9.7
M12.0 *1.75	10.3	10.5
M14.0 *2.0	12.0	12.2
M16.0 *2.0	14.0	14.2
M18.0 *2.5	15.5	15.7
M20.0 *2.5	17.5	17.7
M22.0 *2.5	19.5	19.7
M24.0 *3.0	21.0	—
M27.0 *3.0	24.0	—
M30.0 *3.5	26.5	—
M33.0 *3.5	29.5	—
M36.0 *4.0	32.0	—
M39.0 *4.0	35.0	—
M42.0 *4.5	37.5	—
M45.0 *4.5	40.5	—
M48.0 *5.0	43.0	—

◆. 公制細牙螺紋
Metric fine thread

螺紋代號 Symbol of thread	鑽頭直徑 Drill bit Dia.	
	ASP60A	Carbide
M1.0*0.2	0.80	0.80
M1.1*0.2	0.90	0.90
M1.2*0.2	1.00	1.00
M1.4*0.2	1.20	1.20
M1.6*0.2	1.40	1.40
M1.8*0.2	1.60	1.60
M2.0*0.25	1.75	1.75
M2.2*0.25	1.95	2.00
M2.5*0.35	2.20	2.20
M3.0*0.35	2.70	2.70
M3.5*0.35	3.20	3.20
M4.0*0.5	3.50	3.55
M4.5*0.5	4.00	4.05
M5.0*0.5	4.50	4.55
M5.5*0.5	5.00	5.05
M6.0*0.75	5.30	5.35
M7.0*075	6.30	6.35
M8.0*1.0	7.00	7.10
M8.0*0.75	7.30	7.35
M9.0*1.0	8.00	8.10
M9.0*0.75	8.30	8.35
M10.0*1.25	8.80	8.90
M10.0*1.0	9.00	9.10
M10.0*0.75	9.30	9.35
M11.0*1.0	10.0	10.1
M11.0*0.75	10.3	10.3
M12.0*1.5	10.5	10.7
M12.0*1.25	10.8	10.9
M12.0*1.0	11.0	11.1
M14.0*1.5	12.5	12.7
M14.0*1.0	13.0	13.1
M15.0*1.5	13.5	13.7
M15.0*1.0	14.0	14.1
M16.0*1.5	14.5	14.7
M16.0*1.0	15.0	15.1
M17.0*1.5	15.5	15.7
M17.0*1.0	16.0	16.1
M18.0*2.0	16.0	16.3
M18.0*1.5	16.5	16.7
M18.0*1.0	17.0	17.1
M20*2.0	18.0	18.3
M20*1.5	18.5	18.7
M20*1.0	19.0	19.1
M22*2.0	20.0	–
M22*1.5	20.5	–
M22*1.0	21.0	–
M24*2.0	22.0	–

螺紋代號 Symbol of thread	鑽頭直徑 Drill bit Dia.	
	ASP60A	Carbide
M24*1.5	22.5	–
M24*1.0	23.0	–
M25*2.0	23.0	–
M25*1.5	23.5	–
M25*1.0	24.0	–
M26*1.5	24.5	–
M27*2.0	25.0	–
M27*1.5	25.5	–
M27*1.0	26.0	–
M28*2.0	26.0	–
M28*1.5	26.5	–
M28*1.0	27.0	–
M30*3.0	27.0	–
M30*2.0	28.0	–
M30*1.5	28.5	–
M30*1.0	29.0	–
M32*2.0	30.0	–
M32*1.5	30.5	–
M33*3.0	30.0	–
M33*2.0	31.0	–
M33*1.5	31.5	–
M35*1.5	33.5	–
M36*3.0	33.0	–
M36*2.0	34.0	–
M36*1.5	34.5	–
M38*1.5	36.5	–
M39*3.0	36.0	–
M39*2.0	37.0	–
M39*1.5	37.5	–
M40*3.0	37.0	–
M40*2.0	38.0	–
M40*1.5	38.5	–
M42*4.0	38.0	–
M42*3.0	39.0	–
M42*2.0	40.0	–
M42*1.5	40.5	–
M45*4.0	41.0	–
M45*3.0	42.0	
M45*2.0	43.0	–
M45*1.5	43.5	–
M48*4.0	44.0	–
M48*3.0	45.0	–
M48*2.0	46.0	–
M48*1.5	46.5	–
M50*3.0	47.0	–
M50*2.0	48.0	–
M50*1.5	48.5	–

螺紋代號 Symbol of thread	鑽頭直徑 Drill bit Dia.	
	ASP60A	Carbide
No.1-64UNC	1.55	–
No.2-56UNC	1.80	–
No.3-48UNC	2.10	–
No.4-40UNC	2.30	–
No.5-40UNC	2.60	–
No.6-32UNC	2.80	–
No.8-32UNC	3.40	–
No.10-24UNC	3.90	–
No.12-24UNC	4.50	–
1/4-20UNC	5.10	–
5/16-18UNC	6.60	–
3/8-16UNC	8.00	–
7/16-14UNC	9.40	–
1/2-13UNC	10.80	–
9/16-12UNC	12.20	–
5/8-11UNC	13.60	–
3/4-10UNC	16.50	–
7/8-9UNC	19.50	–
1-8UNC	22.20	–
11/8-7UNC	25.00	–

螺紋代號 Symbol of thread	鑽頭直徑 Drill bit Dia.	
	ASP60A	Carbide
No.0-80UNF	1.25	–
No.1-72UNF	1.55	–
No.2-64UNF	1.85	–
No.3-56UNF	2.10	–
No.4-48UNF	2.40	–
No.5-44UNF	2.70	–
No.6-40UNF	2.90	–
No.8-36UNF	3.50	–
No.10-32UNF	4.10	–
No.12-28UNF	4.60	–
1/4-28UNF	5.50	–
5/16-24UNF	6.90	–
3/8-24UNF	8.50	–
7/16-20UNF	9.90	–
1/2-20UNF	11.50	–
9/16-18UNF	12.90	–
5/8-18UNF	14.50	–
3/4-16UNF	17.50	–
7/8-14UNF	20.50	–
1-12UNF	23.20	–

注：使用此表鑽孔時，據加工條件不同，所鑽孔的尺寸精度有所變化，可以測量實際加工後孔徑尺寸與精度，若底孔不適合則需改變鑽頭直徑。
Remark:When drilling holes according to this table, the size precision of drilled holes will change depending on machining conditions. Hole diameter and precision can be measured after actual machining. If the bottom hole is not appropriate, drill bit diameter shall be changed.

醫用工具及配件系列（鑽針、骨鑽、骨科工具系列）
Medical tools and parts series（Drill points、Orthopedic drills、Orthopedic tools series)
医療器具及び部品シリーズ（ドリルピン、骨ドリル、整形外科工具

(超高防锈型(AA)&超高耐磨型(A))
(High anti-rust type (AA)
& super wear-resistant type (A))
(超防錆型(AA)&超耐磨耗型(A))

圓型球頭 Circular ball nose
ボール型カッタヘッド

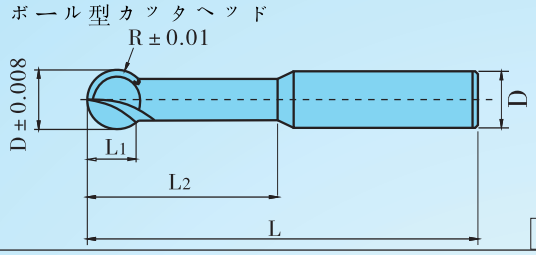

A

拋物頭 Parabola head
放物線型カッタヘッド

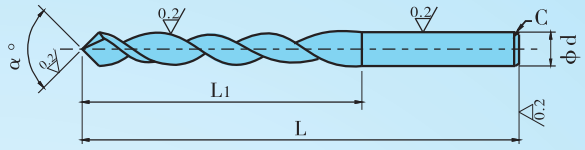

B

高剛性 High rigidity
高剛性

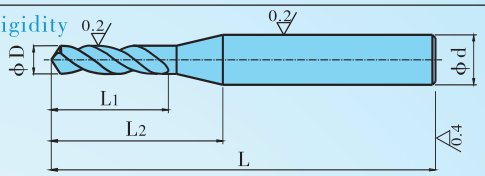

D

球鑽 Ball nose Drill bit
ボール型ドリル

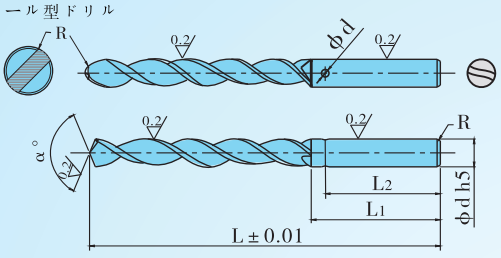

C

挂槽柄鑽頭 Hanging groove holder drill bit
掛け溝付け柄のドリル

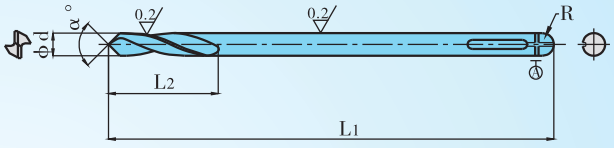

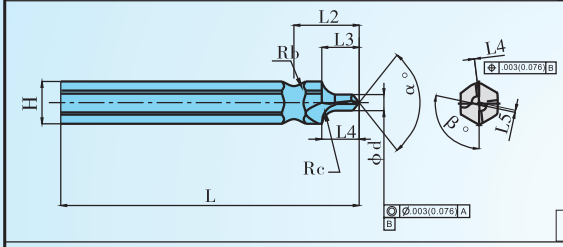

F

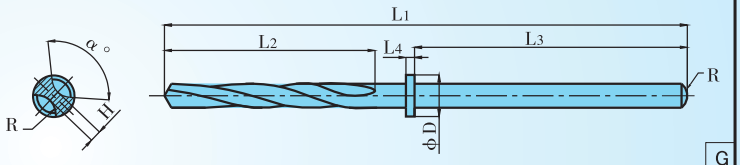

G

小型細長孔特殊刀具 Small-sized special tooling with thin and long hole 小型細長特殊カッタ
（鈦/ 鈦合金/不銹鋼）（titanium/ titanium alloy/stainless high speed steel）

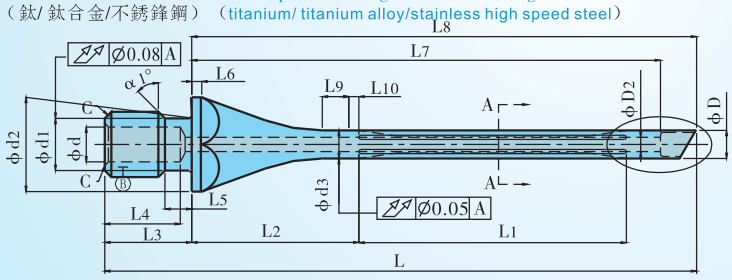

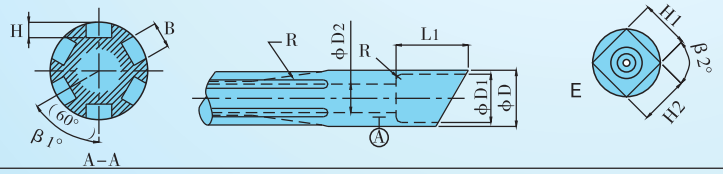

H

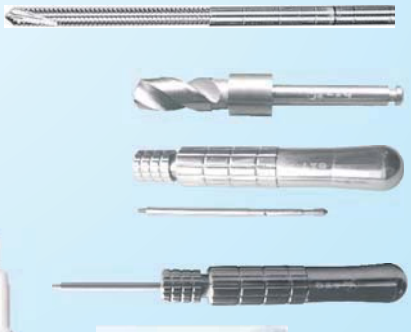

可研磨加工渦輪手機內的高精密配件，高要求零附件
We can grind and process high precision parts and requiring accessories in turbine hand tool

★.依圖依樣尺寸/公差/要求復合成型加工，可生產極為復雜、精密的柄部形狀。Compound contour machining according to the sizes/ tolerances/requirements of drawings and samples, we can produce extreme complex and accurate holder profile.
図面、サンプル、寸法または公差の要求により複合成型加工を行い、極めて複雑、精密な柄部の形状を生産できる.

醫用工具及配件系列（鑽針、骨鑽、骨科工具系列）
Medical tools and parts series（Drill points、Orthopedic drills、Orthopedic tools series)
医療器具及び部品シリーズ（ドリルピン、骨ドリル、整形外科工具

(超高防锈型(AA)&超高耐磨型(A))
(High anti-rust type (AA)
& super wear-resistant type (A))
(超防錆型(AA)&超耐磨耗型(A))

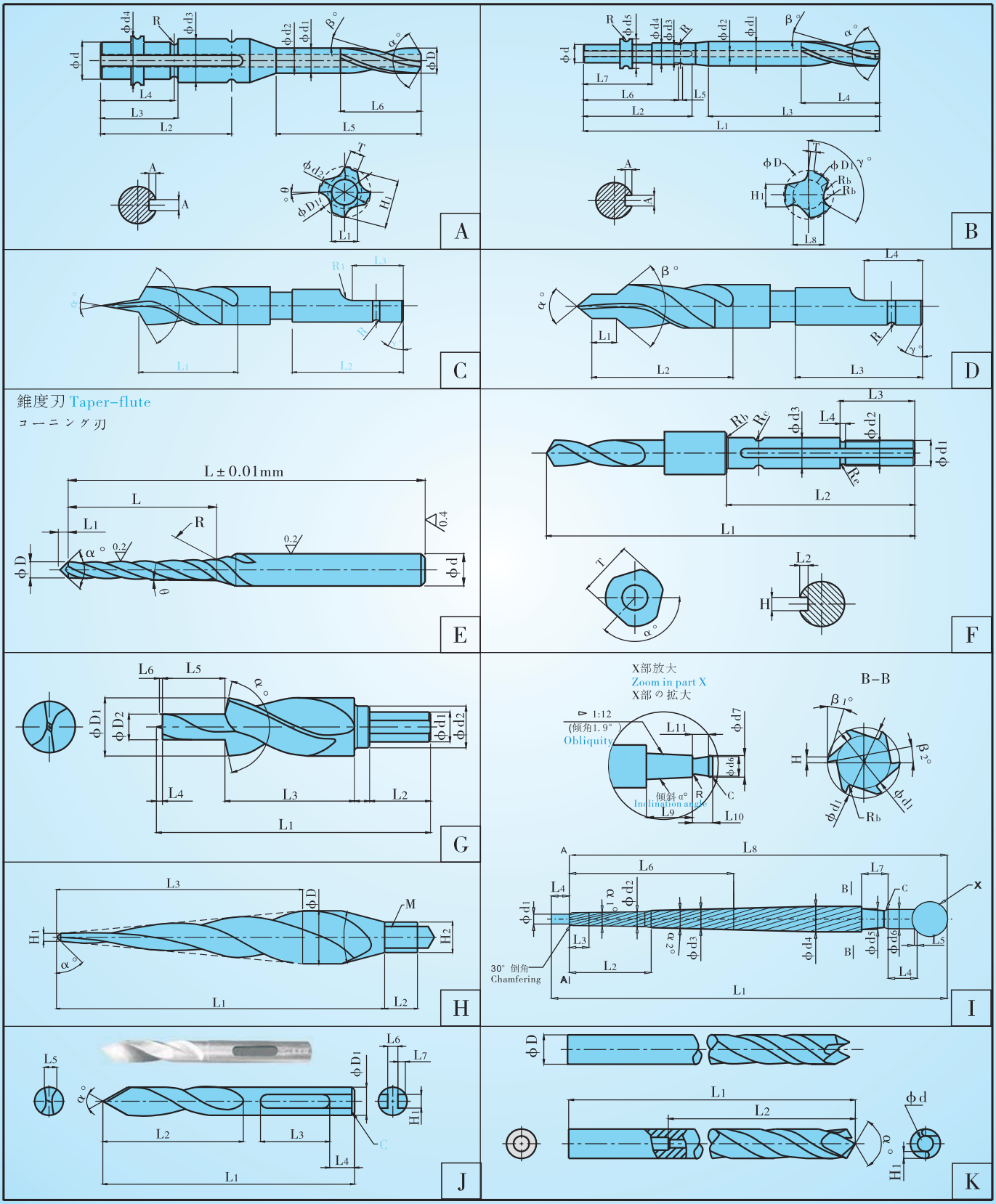

★.依圖依樣尺寸/公差/要求復合成型加工，可生產極為複雜、精密的柄部形狀。Compound contour machining according to the sizes/ tolerances/ requirements of drawings and samples, we can produce extreme complex and accurate holder profile.
図面、サンプル、寸法または公差の要求により複合成型加工を行い、極めて複雑、精密な柄部の形状を生産できる.

醫用工具及配件系列（鑽針、骨鑽、骨科工具系列）
Medical tools and parts series（Drill points、Orthopedic drills、Orthopedic tools series)
医療器具及び部品シリーズ（ドリルピン、骨ドリル、整形外科工具

(超高防锈型(AA)&超高耐磨型(A))
(High anti-rust type (AA)
& super wear-resistant type (A))
(超防錆型(AA)&超耐磨耗型(A))

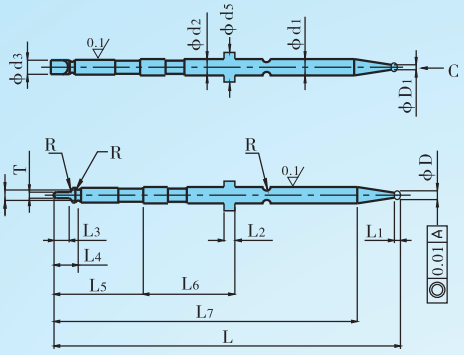

圓型多刃
Circular multi-flute
丸型多刃

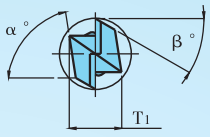

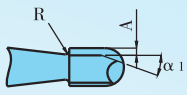

球型刃
Ball-flute
ボール型刃

任意深淺的容屑槽及刃數、螺旋角.....270°
CNC成型研磨。
It can be any depth of chip flute with any numbers of flute and helix angle..... 270° profile grinding.

A

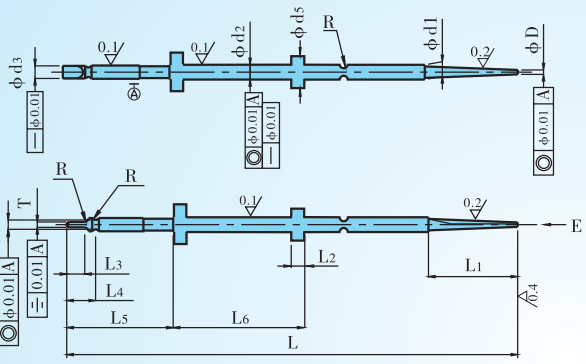

成型錐度鉸型 Type of profile taper reamer
成型コーニング絞り型

B

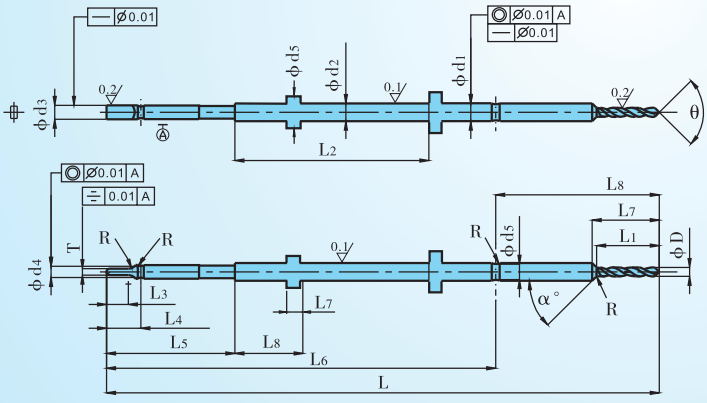

鑽鉸型 Type of drilling-reamer
ドリルリーマ型

C

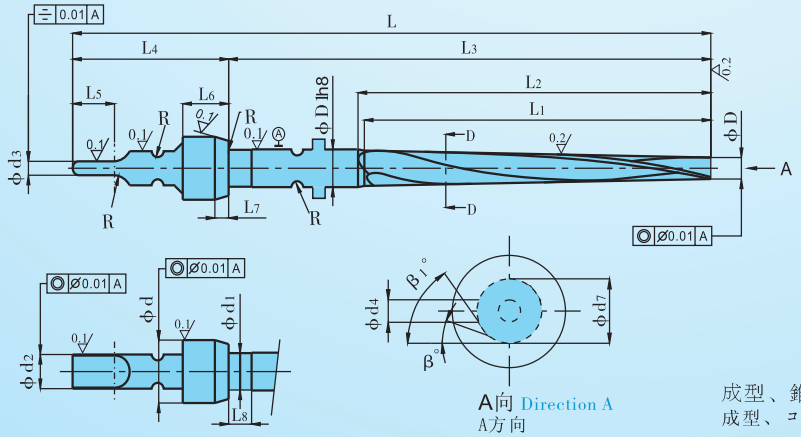

可超硬研磨任意螺旋角、刃口的鋒利程度類型要求
We can super hard grind any helix angle and satisfy your requirement of any degree of sharpness for cutting edge.

A向 Direction A
A方向

成型、錐度銑型 Profile, taper-milling
成型、コーニング・フライス型

D

★.依圖依樣尺寸/公差/要求復合成型加工，可生產極為復雜、精密的柄部形狀。Compound contour machining according to the sizes/ tolerances/ requirements of drawings and samples, we can produce extreme complex and accurate holder profile.
図面、サンプル、寸法または公差の要求により複合成型加工を行い、極めて複雑、精密な柄部の形状を生産できる.

醫用工具及配件系列（鑽針、骨鑽、骨科工具系列）
Medical tools and parts series（Drill points、Orthopedic drills、Orthopedic tools series)
医療器具及び部品シリーズ（ドリルピン、骨ドリル、整形外科工具

(超高防锈型(AA)&超高耐磨型(A))
(High anti-rust type (AA)
& super wear-resistant type (A))
(超防錆型(AA)&超耐磨耗型(A))

超長刃型 Type of super long-flute
超長刃型

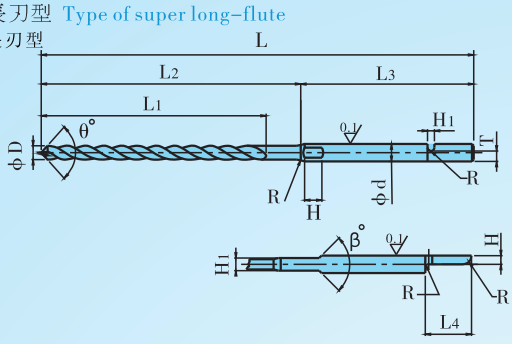

A

微型治具、起子、刀模具
Miniature fixture, screwdriver, cutting tool
微型治具、スクリュードライバー、カッタ金型

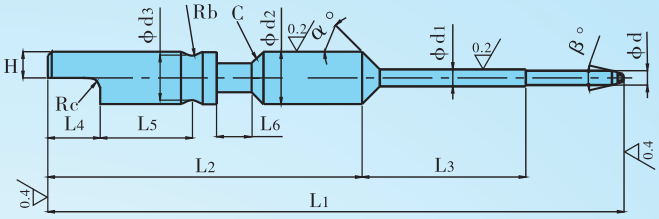

B

成型柄方頭 Profile shank with square head
成型柄方形ヘッド

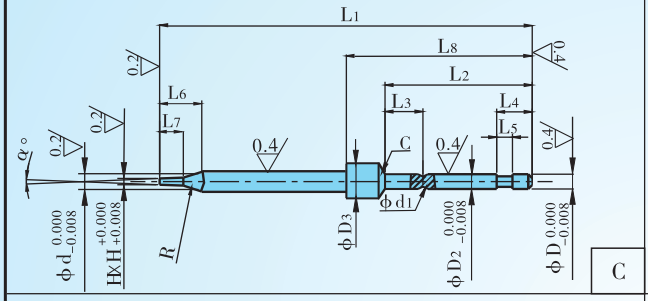

C

成型柄尖頭 Profile shank with cusp
成型柄の尖るヘッド

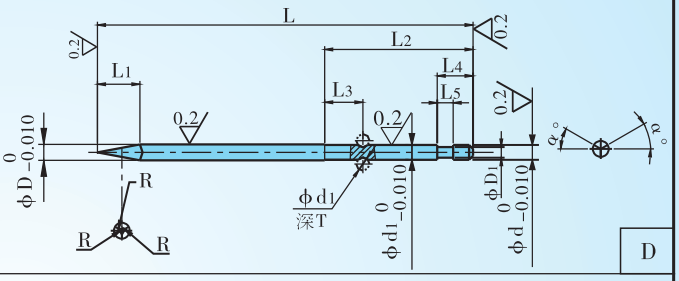

D

螺紋柄型 Type of helical shank
ねじ山柄型

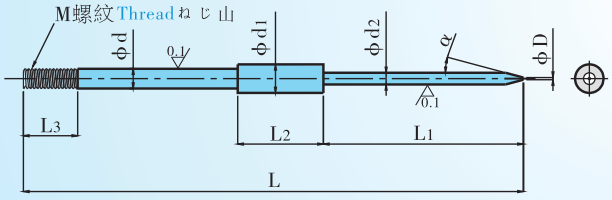

多功能成型柄 Multifunctional profile shank
多機能成型柄

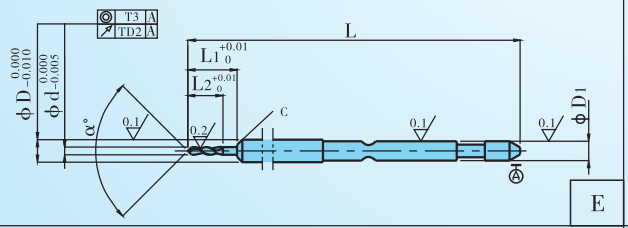

E

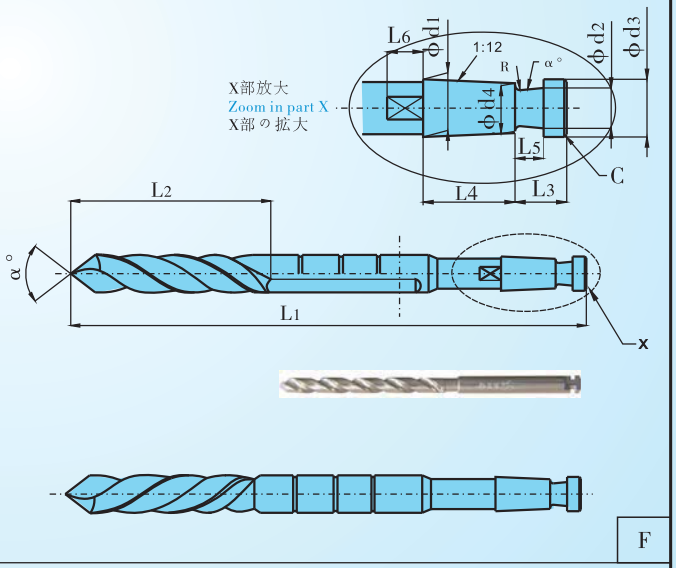

F

帶導柱型 With guide pillar
ガイドボール付け型

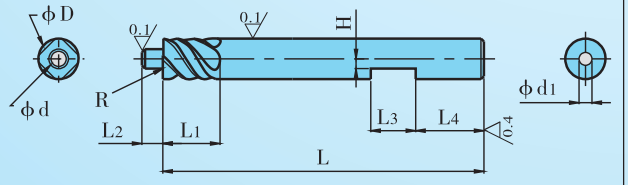

G

組合型 Combined
組合型

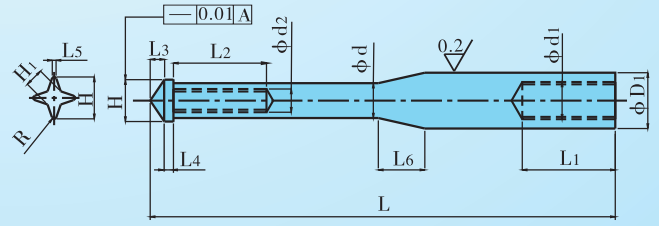

H

★.依圖依樣尺寸/公差/要求復合成型加工，可生產極為復雜、精密的柄部形狀。Compound contour machining according to the sizes/ tolerances/ requirements of drawings and samples, we can produce extreme complex and accurate holder profile.
図面、サンプル、寸法または公差の要求により複合成型加工を行い、極めて複雑、精密な柄部の形状を生産できる.